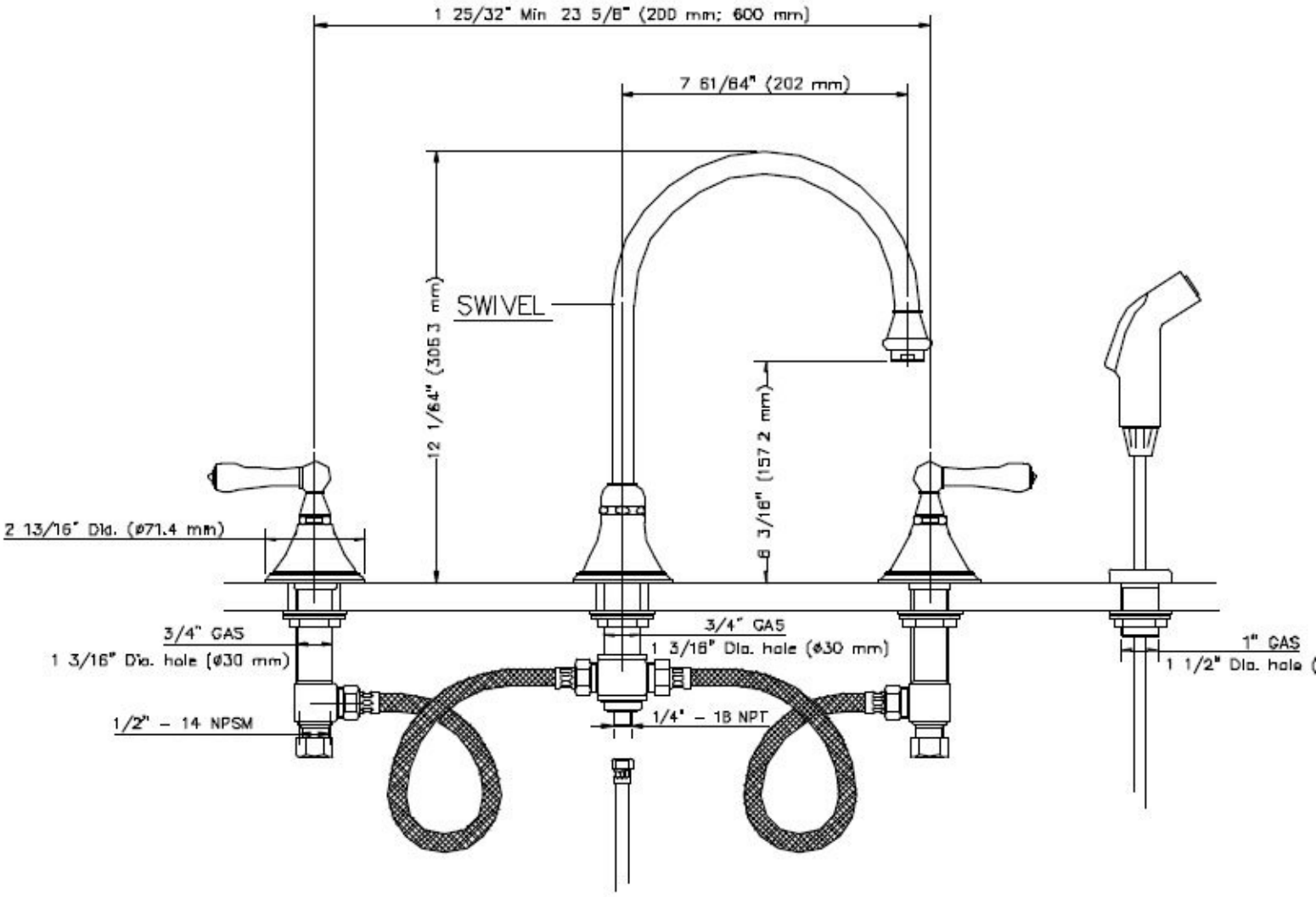

Spout: Forged/tubular brass with water conserving aerator.
Swivel faucet.

Trim: Hot forged brass.
Three handles available

Valve: ½" Ceramic disc valve cartridge.
1,000,000 Tested cycles.
¼ Turn positive on/off.
Non-rising spindle.

Inlets: Sized for either coupling or sweat conn

Pressure: Maximum (tested): 200 psi (14.1 k
Recommended (flowing): 15-75 ps
5.3 kg/cm)

Flow rates: 2.2 GPM @ 60psi (flowing); (8.4
@ 4.2 kg/cm (flowing)