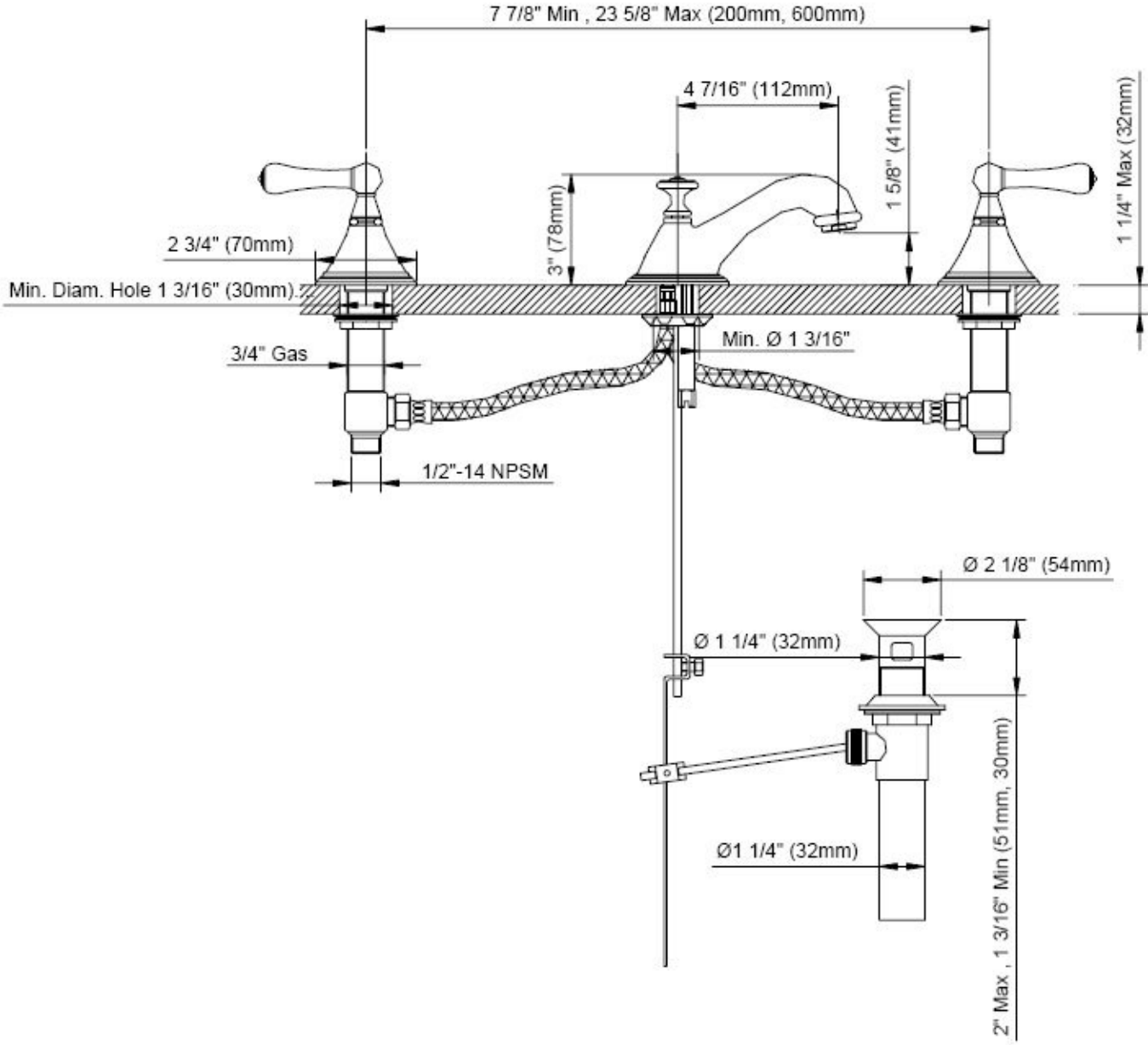
7 7/8" Min , 23 5/8" Max (200mm, 600mm)
4 7/16" (112mm)
1 5/8" (41mm)
1 1/4" Max (32mm)
3" (78mm)
2 3/4" (70mm)
Min. Diam. Hole 1 3/16" (30mm)
3/4" Gas
Min. Ø 1 3/16"
1/2"-14 NPSM
Ø 2 1/8" (54mm)
Ø 1 1/4" (32mm)
Ø1 1/4" (32mm)
2" Max , 1 3/16" Min (51mm, 30mm)