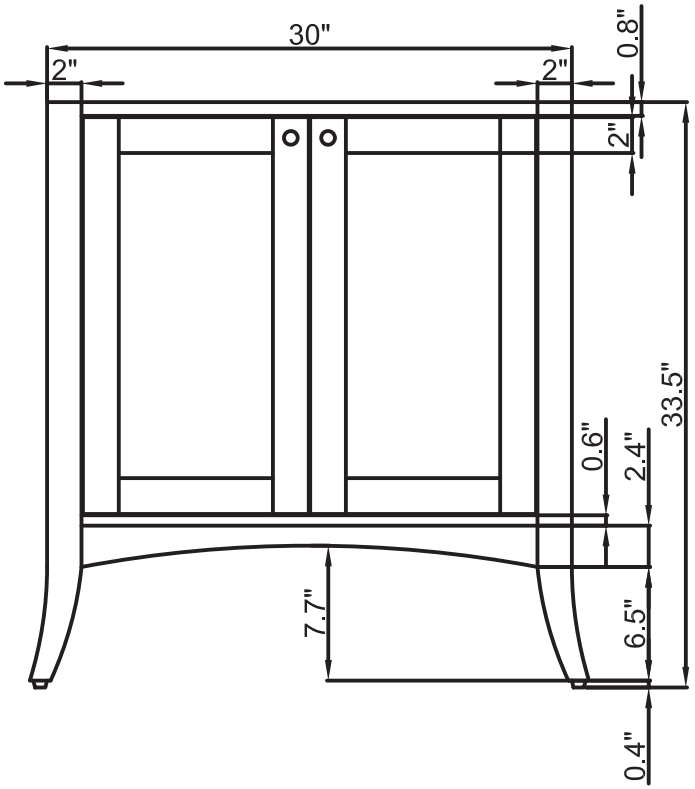

FRONT VIEW

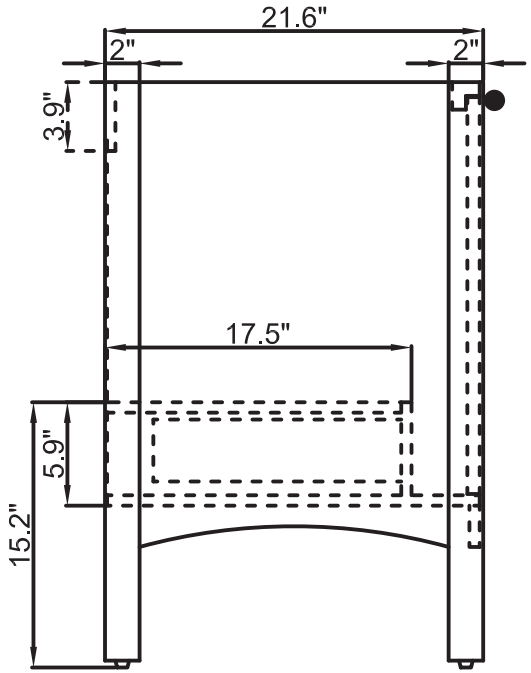

SIDE VIEW

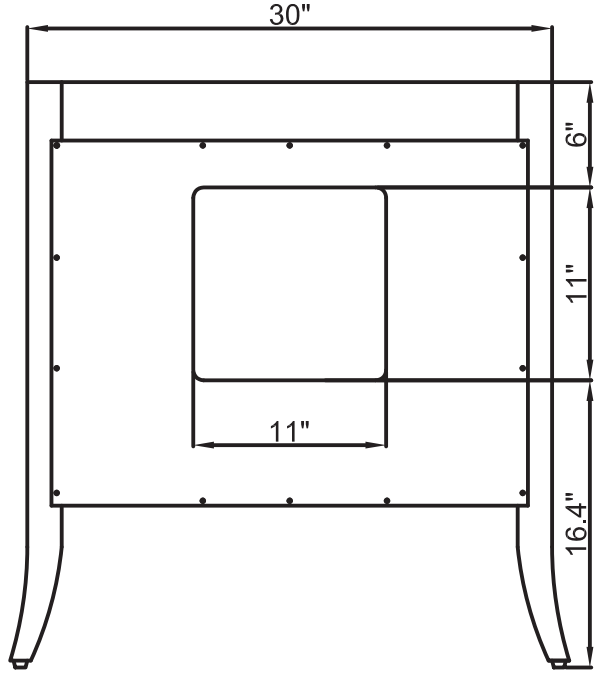

BACK VIEW

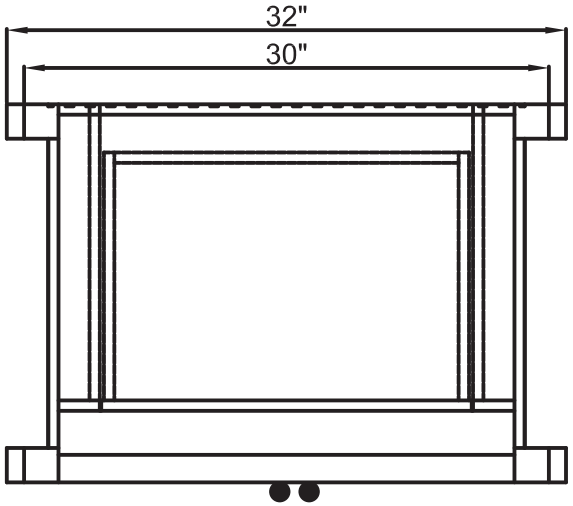

TOP VIEW

EMPRESS 30"