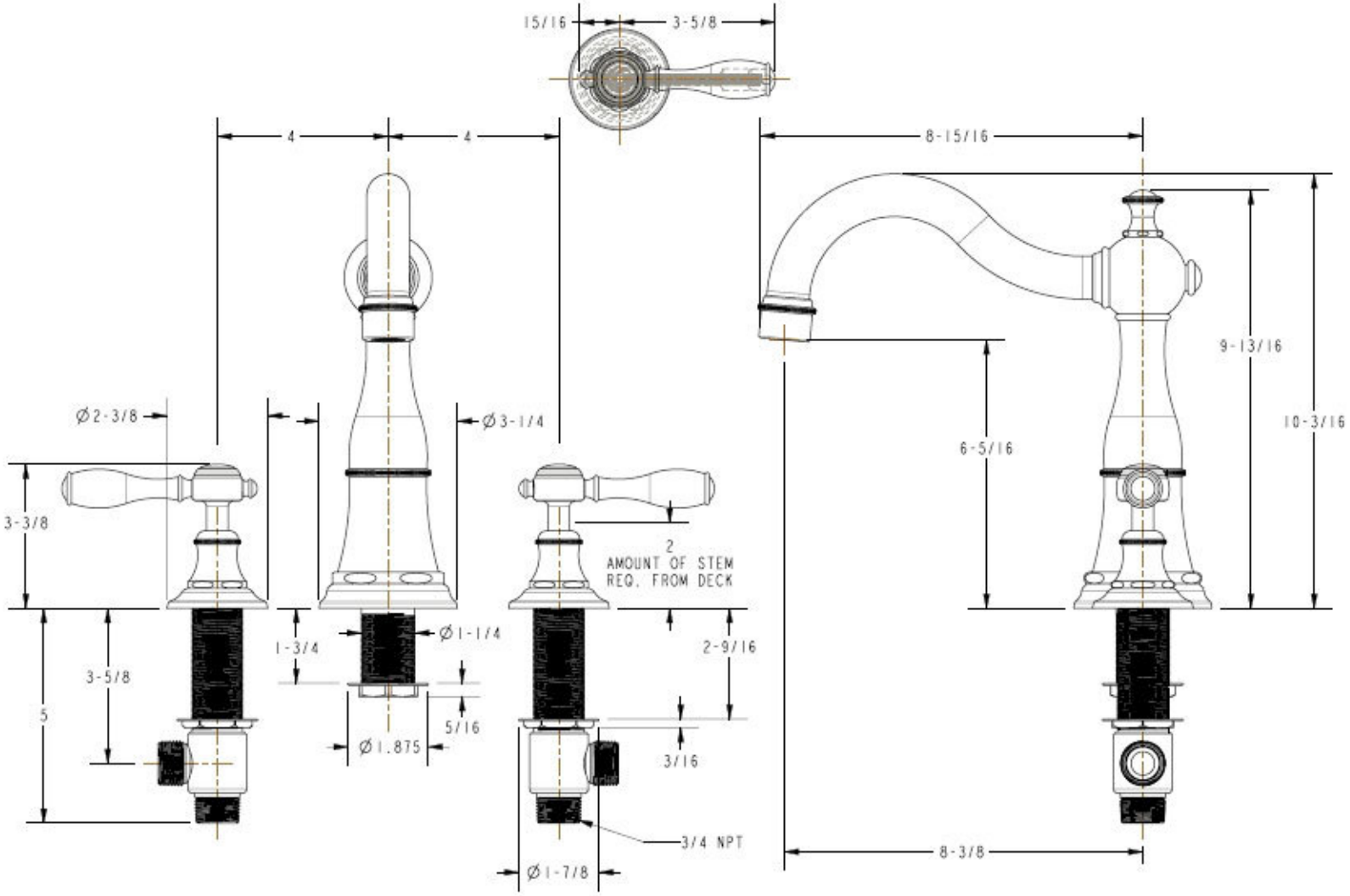

DIMENSIONS ARE IN INCHES AND AN APPROXIMATION OF A TYPICAL INSTALLATION