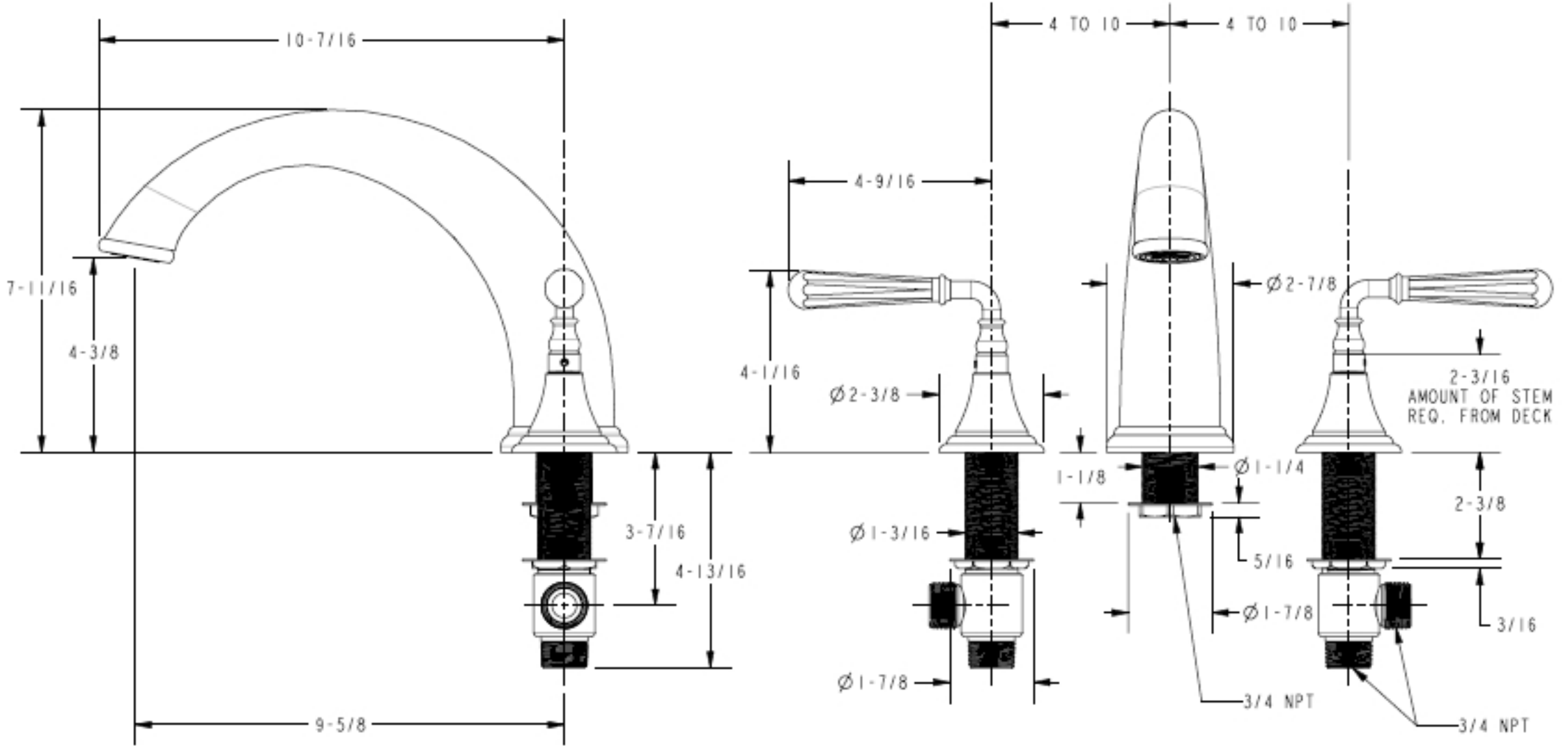
10-7/16
7-11/16
4-3/8
3-7/16
4-13/16
9-5/8
4 TO 10
4 TO 10
4-9/16
4-1/16
Ø2-3/8
Ø2-7/8
2-3/16
AMOUNT OF STEM
REQ. FROM DECK
1-1/8
Ø1-1/4
2-3/8
Ø1-3/16
5/16
Ø1-7/8
3/16
Ø1-7/8
3/4 NPT
3/4 NPT