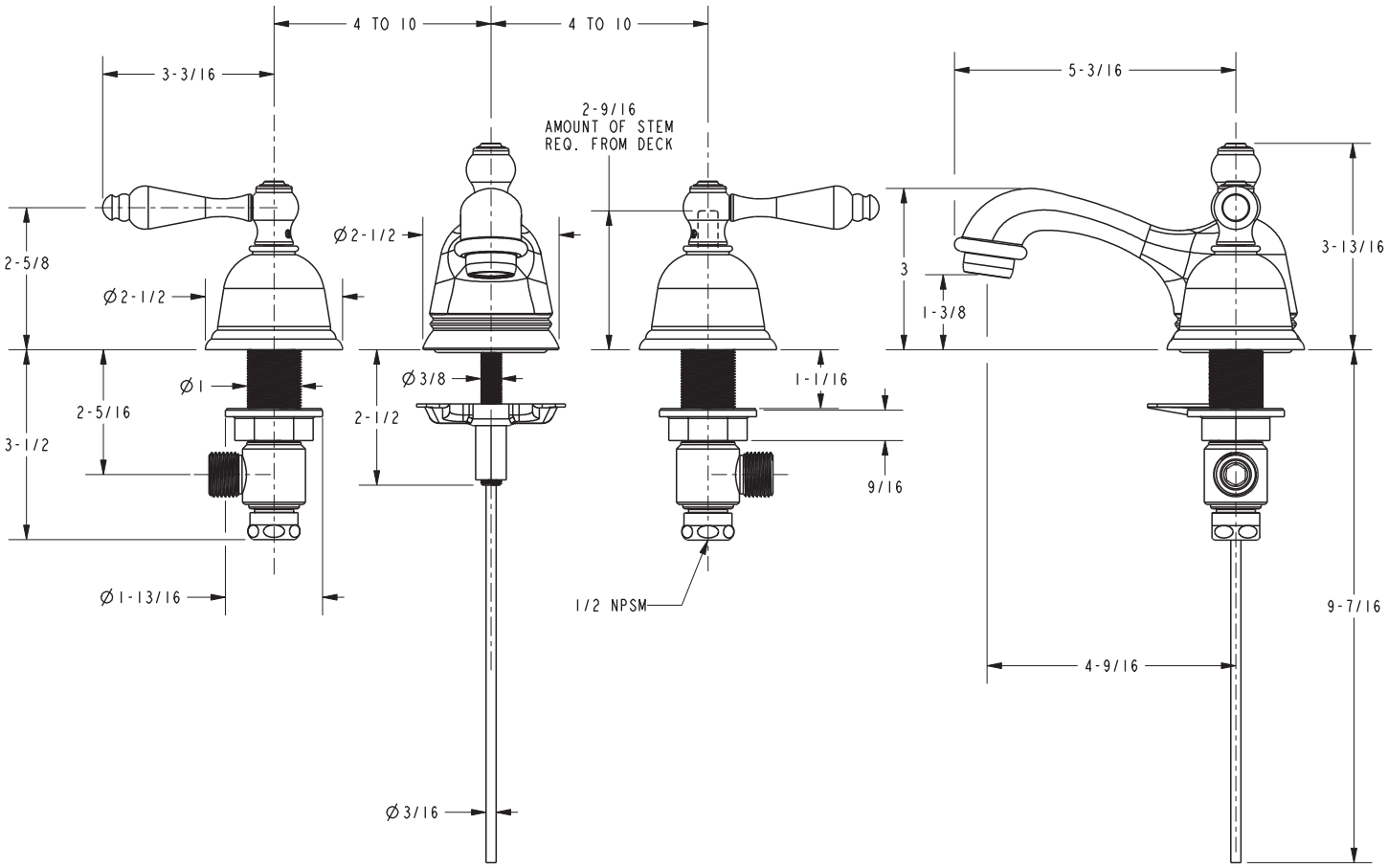Product Dimensions *(units are in inches)*