SAMUEL HEATH

Product Number: V7KA14LL-CP

Description: 3 Hole lavatory filler with pop-up waste, 5 7/16" spout height

Standards

LP Min 7.3 psi

water saving

Flow rates

Gallons/Min	1.5 PSI	7.3 PSI	14.5 PSI	29.0 PSI	43.5 PSI	58.0 PSI	72.5 PSI
		0.5	0.7	1.0	1.1	1.1	1.1

Flow rate data provided is indicative of each product and is given in open outlet conditions. Installation design, external connections and fittings not supplied may affect the data provided.

Finishes Available

Chrome Plate

Polished Nickel

Non Lacquered Brass

Satin Nickel (US15)

Stainless Steel with Matt Black

Urban Brass

City Bronze

Matt Black Chrome

Urban Brass Matt Lacquered

Antique Brass Matt

Antique Brass Gloss

Amber Brass

Control Options Available

Specification Drawing

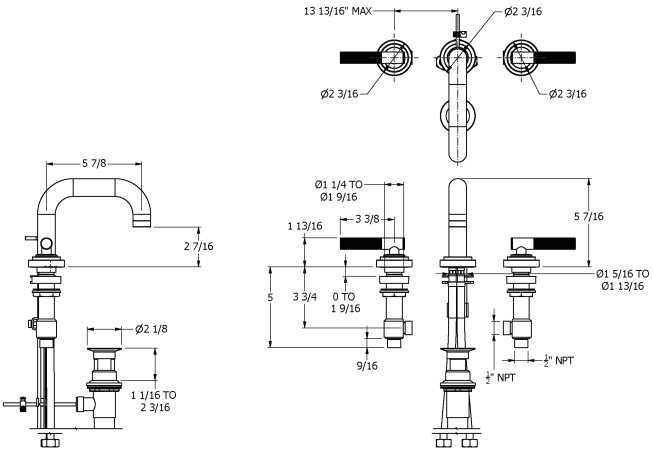

UK Customer Service
Leopold Street
Birmingham
B12 0UJ
Tel: +44 121 766 4200
Email: info@samuel-heath.com

US Customer Service
Federal I.D. No. 58-1504682
Email: usa@samuel-heath.com

Specification Enquiries
Design Centre Chelsea Harbour
1st Floor, North Dome, London
SW10 0XE
Tel: 020 7352 0249
Email: showroom@samuel-heath.com