SAMUEL HEATH

Product Number: V2K5AXGC9

Description: Exposed 1/2" thermostatic shower set - diverter

Standards

water saving

Finishes Available

Chrome Plate | Polished Nickel | Non Lacquered Brass | Antique Gold | Satin Nickel (US15) | City Bronze | Country Bronze | Brushed Gold Gloss | Brushed Gold Matt

Brushed Gold Unlacquered | Antique Brass Matt | Antique Brass Gloss | Amber Brass

Specification Drawing

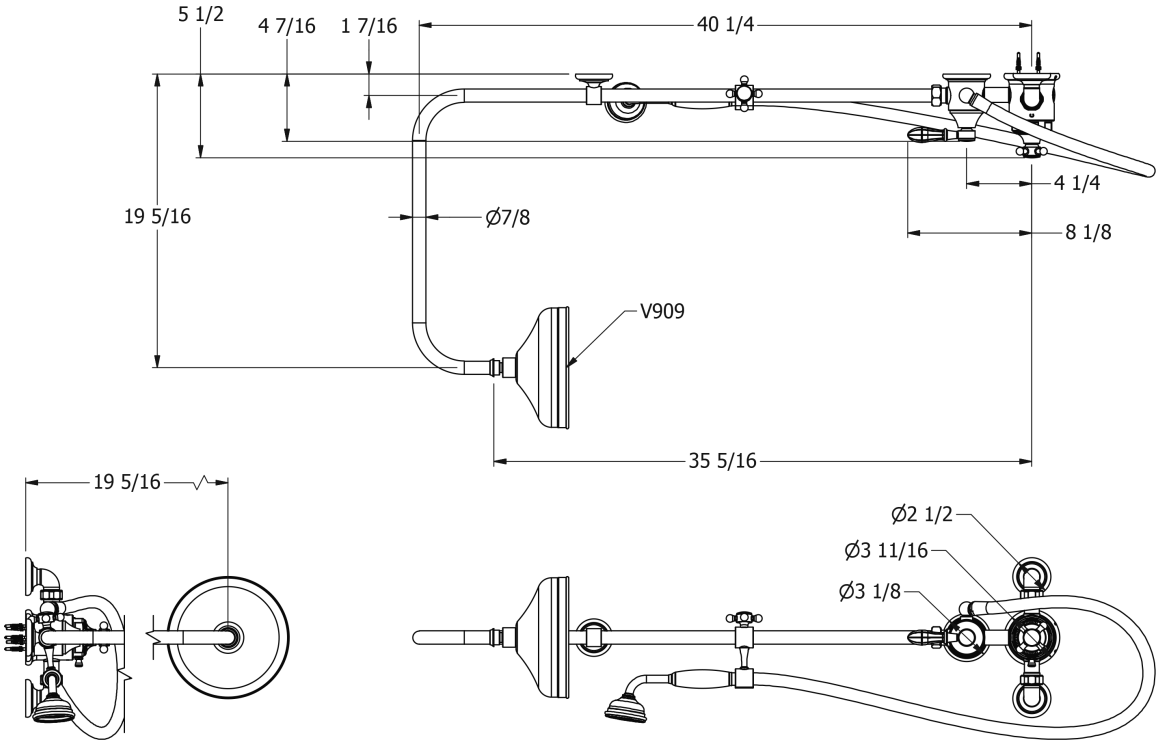

UK Customer Service
Leopold Street
Birmingham
B12 0UJ
Tel: +44 121 766 4200
Email: info@samuel-heath.com

US Customer Service
Federal I.D. No. 58-1504682
Email: usa@samuel-heath.com

Specification Enquiries
Design Centre Chelsea Harbour
1st Floor, North Dome, London
SW10 0XE
Tel: 020 7352 0249
Email: showroom@samuel-heath.com