SAMUEL HEATH

Product Number: V2K5AXGC8

Description: Exposed 1/2" thermostatic shower set - diverter

Standards

water saving

Finishes Available

Chrome Plate

Polished Nickel

Non Lacquered Brass

Antique Gold

Satin Nickel (US15)

Brushed Gold Unlacquered

Specification Drawing

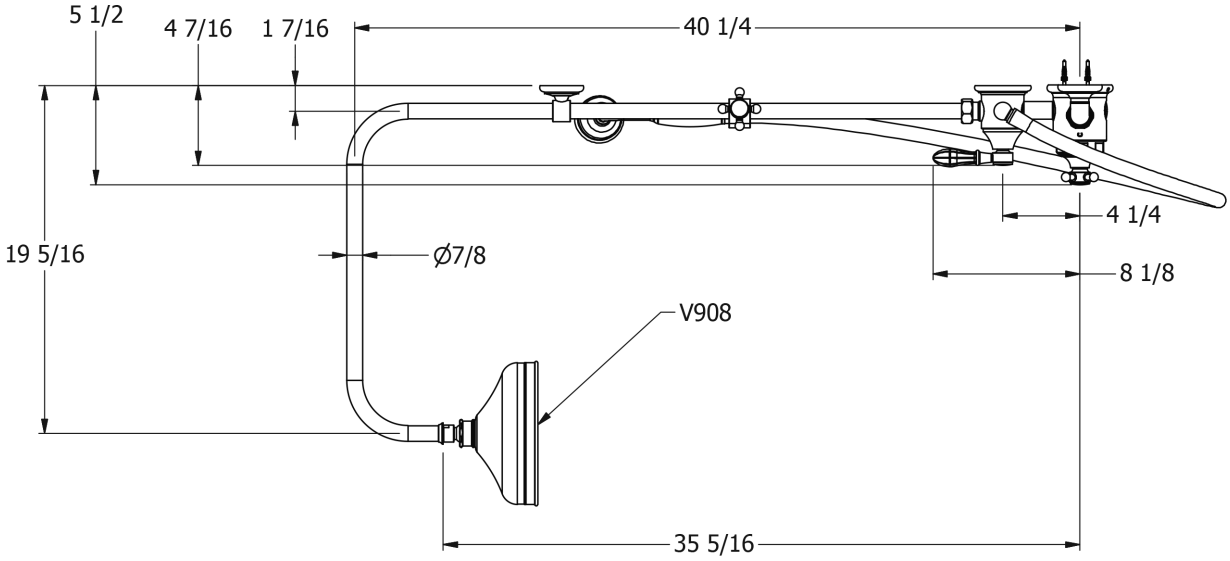

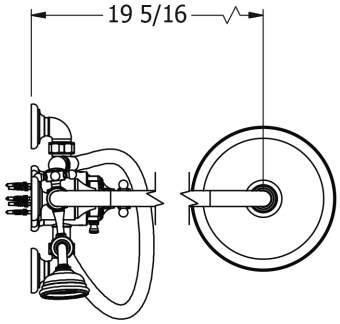

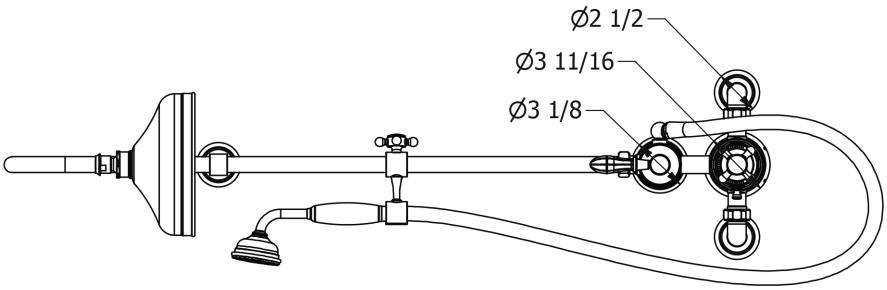

UK Customer Service
Leopold Street
Birmingham
B12 0UJ
Tel: +44 121 766 4200
Email: info@samuel-heath.com

US Customer Service
Federal I.D. No. 58-1504682
Email: usa@samuel-heath.com

Specification Enquiries
Design Centre Chelsea Harbour
1st Floor, North Dome, London
SW10 0XE
Tel: 020 7352 0249
Email: showroom@samuel-heath.com