NEWPORT BRASS

EAST LINEAR

WIDESPREAD LAVATORY

990S

Features

- Solid brass construction
- Brass valve bodies
- Quarter-turn washerless ceramic disc valve cartridges
- Spout assembly with integral supply hoses
- Push Pop-Up drain with tailpiece
- 5.30" (13.5 cm) spout height at outlet
- 6.25" (15.9 cm) spout reach (c-c)
- For 8" (20.3 cm) centers -Maximum 20" (50.8 cm)
- ADA Compliant
- 1.2 GPM (4.5 LPM) Max

Codes / Standards Compliance

Meets or exceeds the following at date of manufacture:

- ASME A112.18.1/CSA B125.1
- IAPMO/cUPC
- NSF/ANSI/CAN 61, SECTION 9
- NSF/ANSI 372
- IPC
- ADA & ICC/ANSI A117.1
- Energy Policy Act of 1992
- EPA WaterSence
- California Energy Commission
- All applicable US Federal and State material regulations

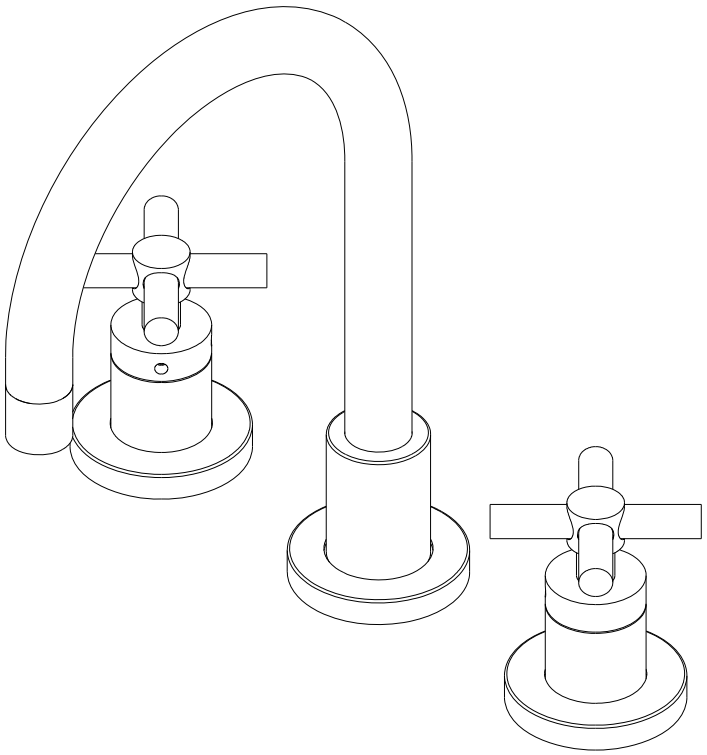

t: 949.417.5207 | www.newportbrass.com

NEWPORT BRASS

PRODUCT DIMENSIONS *(Units are in inches)*

Product Dimensions are provided for reference only. For specific product installation guidelines, please reference the Installation Instructions of the product being installed.

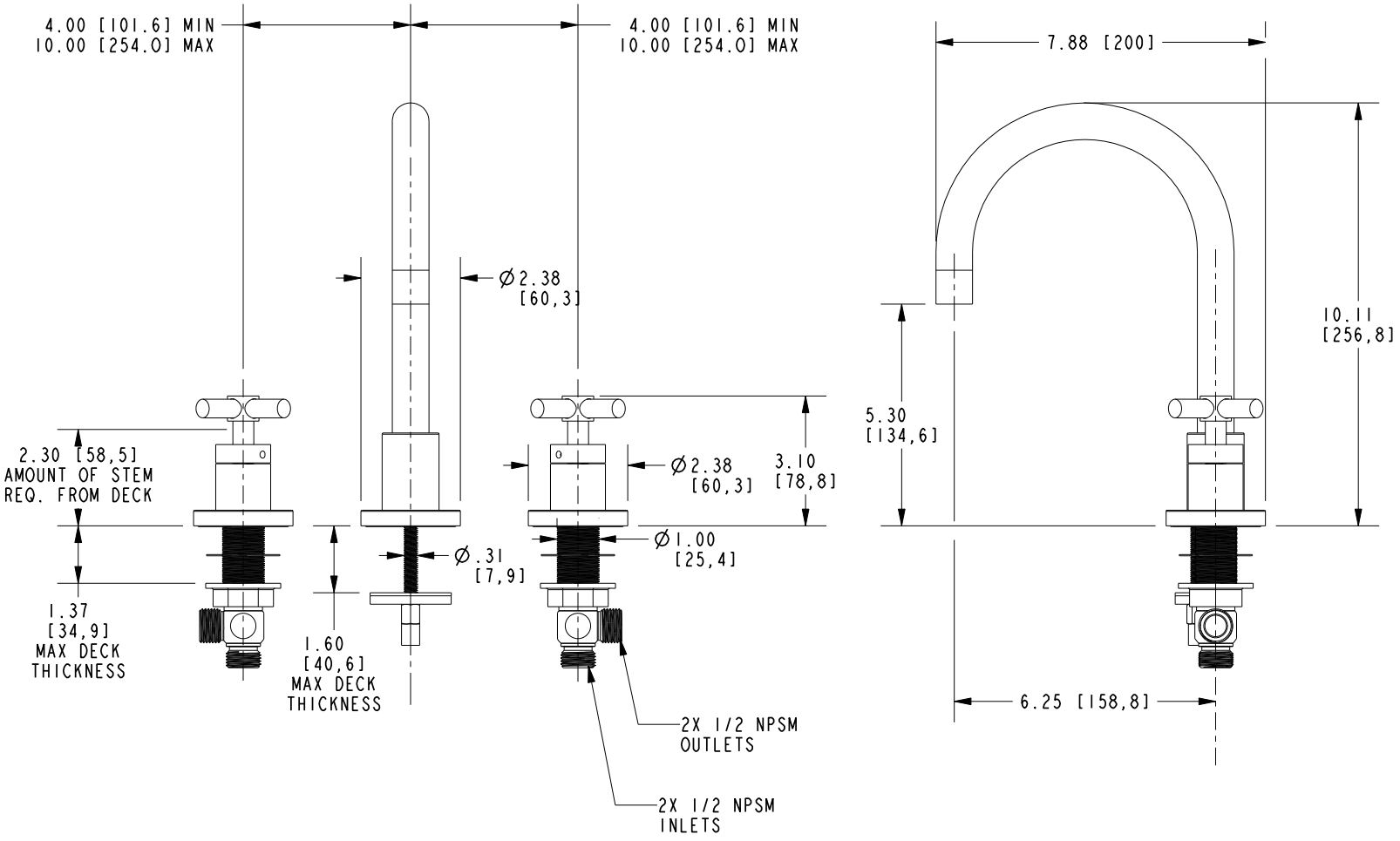

WIDESPREAD LAVATORY

990S

Newport Brass reserves the right (1) to make changes in specifications and materials, and (2) to change or discontinue models, both without notice or obligation. See current full-line price book or www.newportbrass.com for finish options and product availability.