RIVA Collection
G-8804CD
RIVA Contemporary handshower diamond knurled

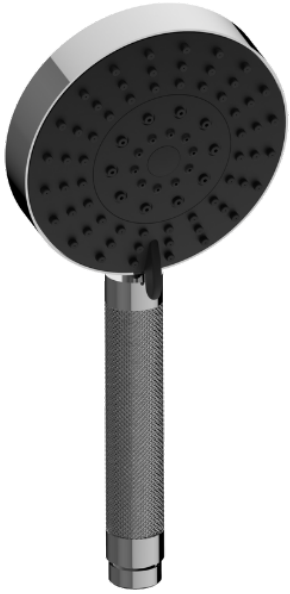

Product Features

- Flow rate 1.5 max gpm

Available Finishes

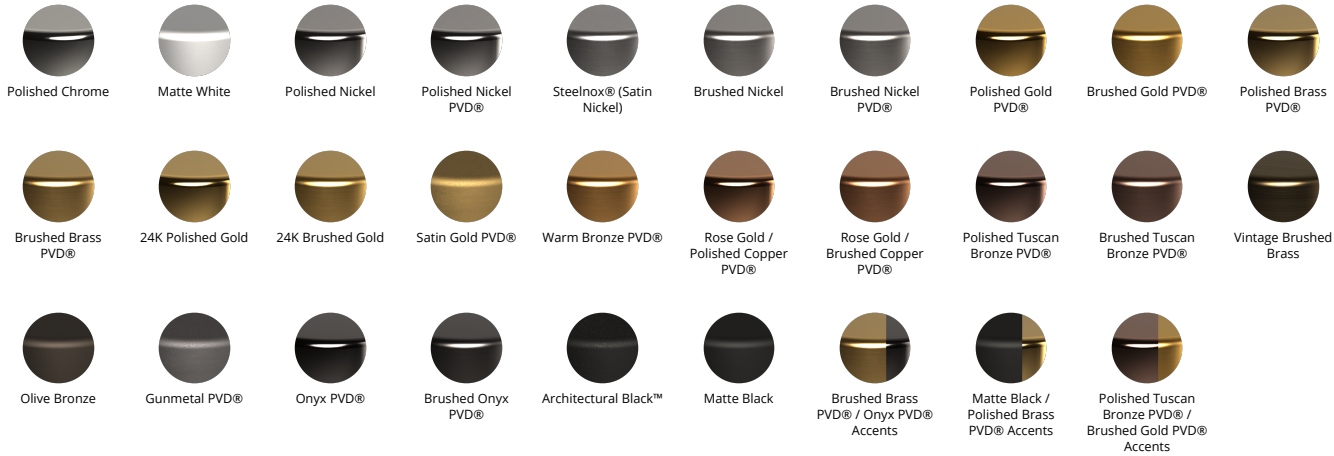
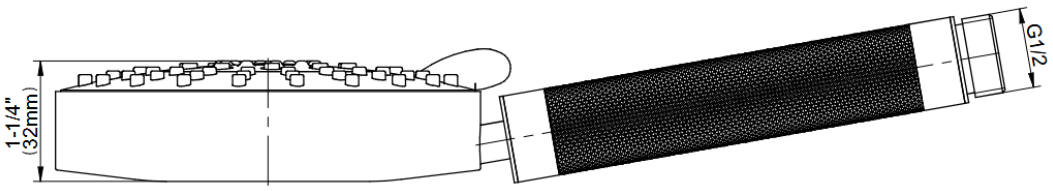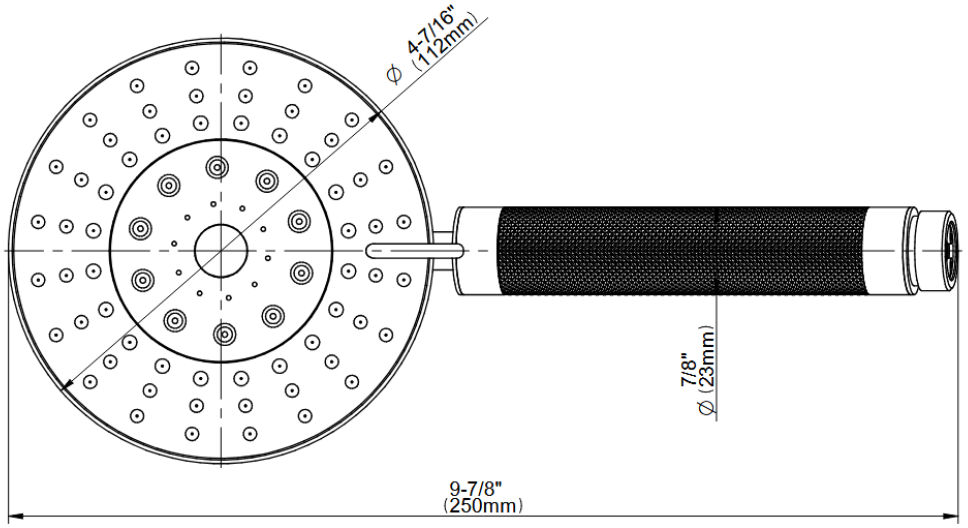
RIVA Collection
G-8804CD
RIVA Contemporary handshower diamond knurled