RIVA Collection
G-8713TP
RIVA Traditional wall supply elbow

Available Finishes

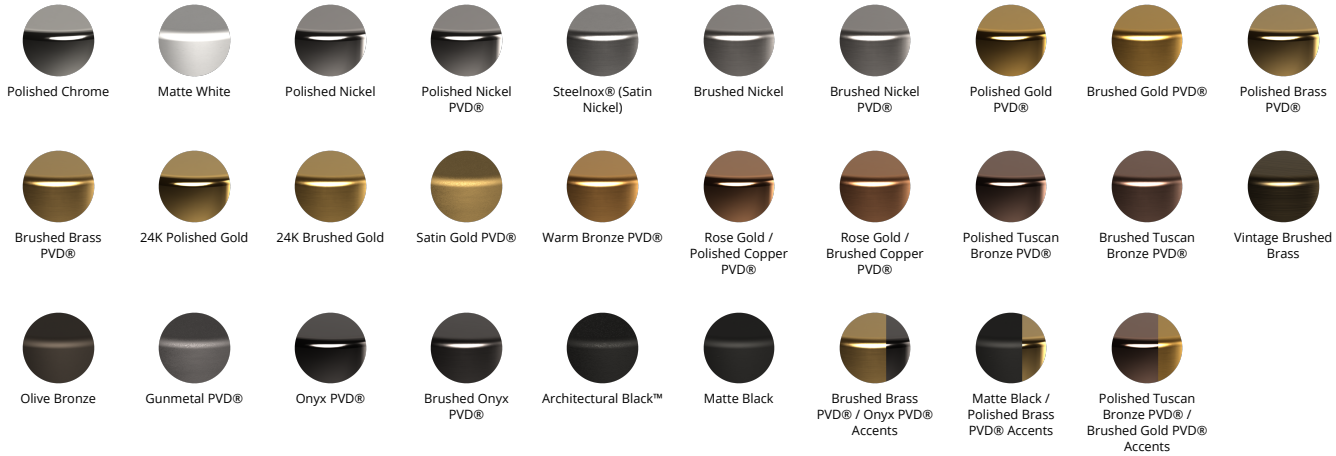

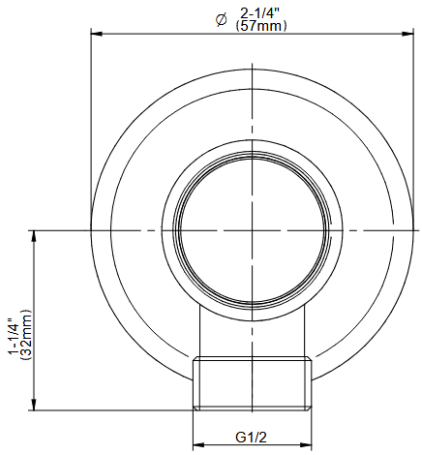

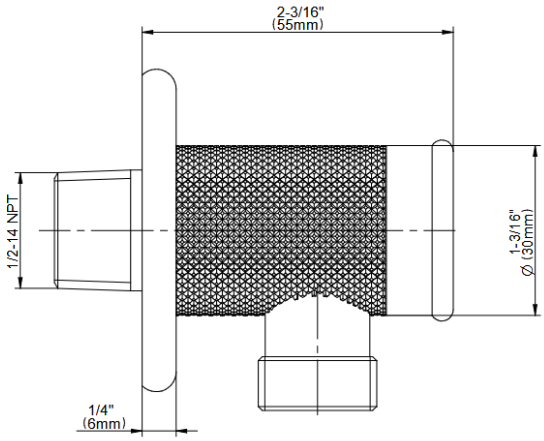

The measurements shown are for reference only. Products and specifications shown are subject to change without notice. Revised 09/2023
www.graff-designs.com | phone: 800-954-4723