RIVA Collection
G-8618CP
RIVA Contemporary wall bracket and integrated wall supply elbow

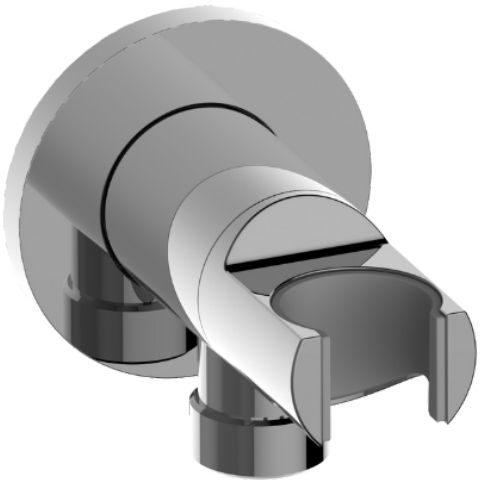
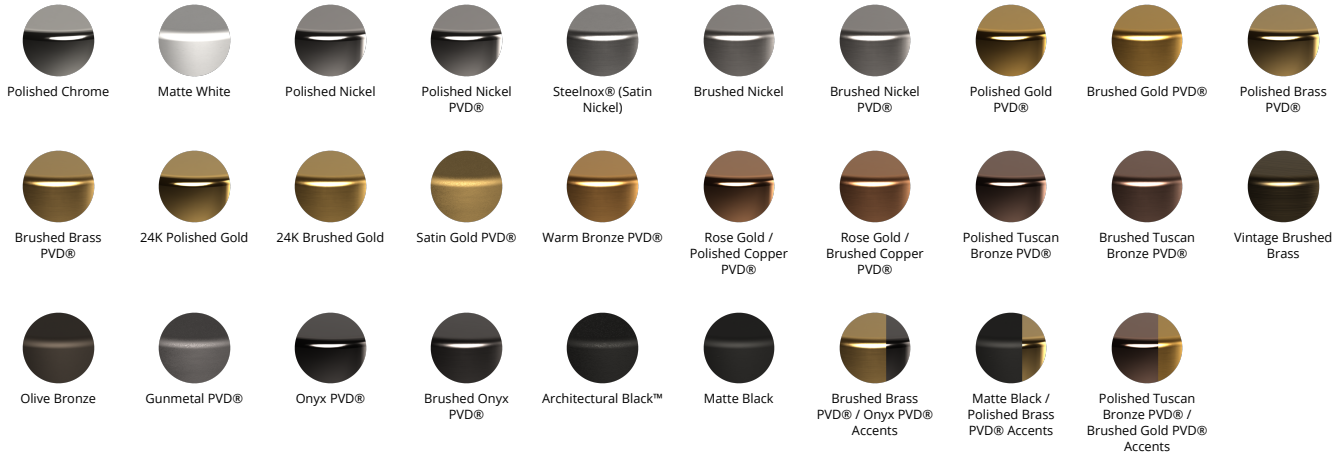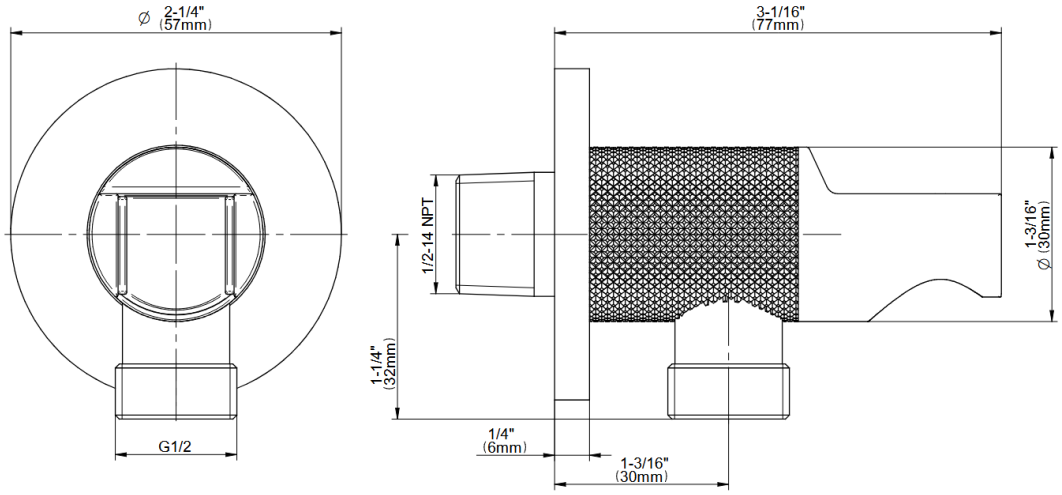
Available Finishes