RIVA Collection
G-19409CD
RIVA Contemporary 76,2cm towel bar diamond knurled
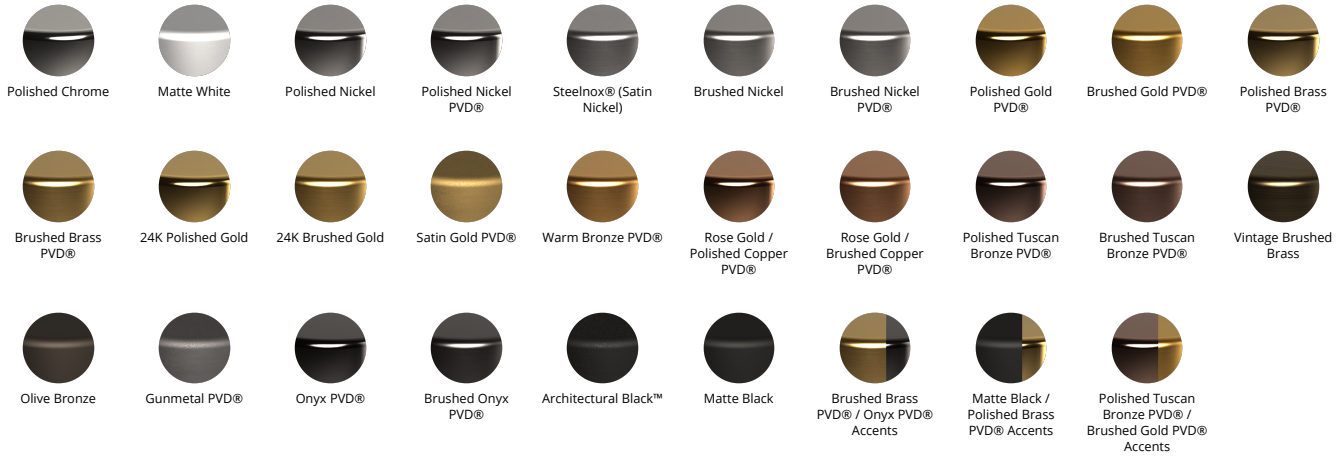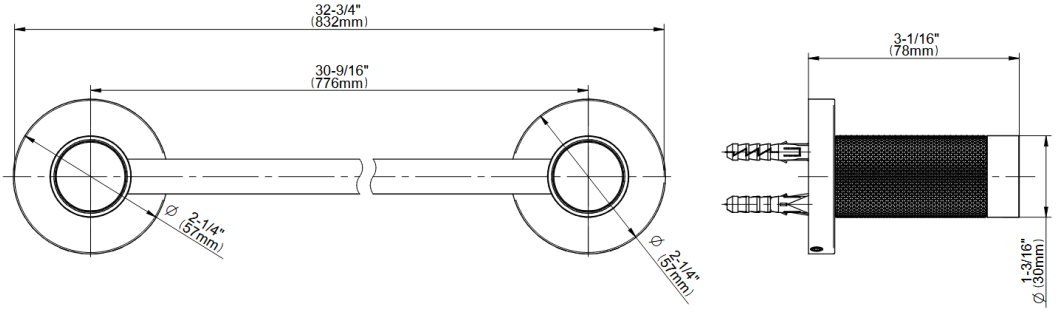
Available Finishes