RIVA Collection
G-19407TP
RIVA Traditional 45cm towel bar

Available Finishes

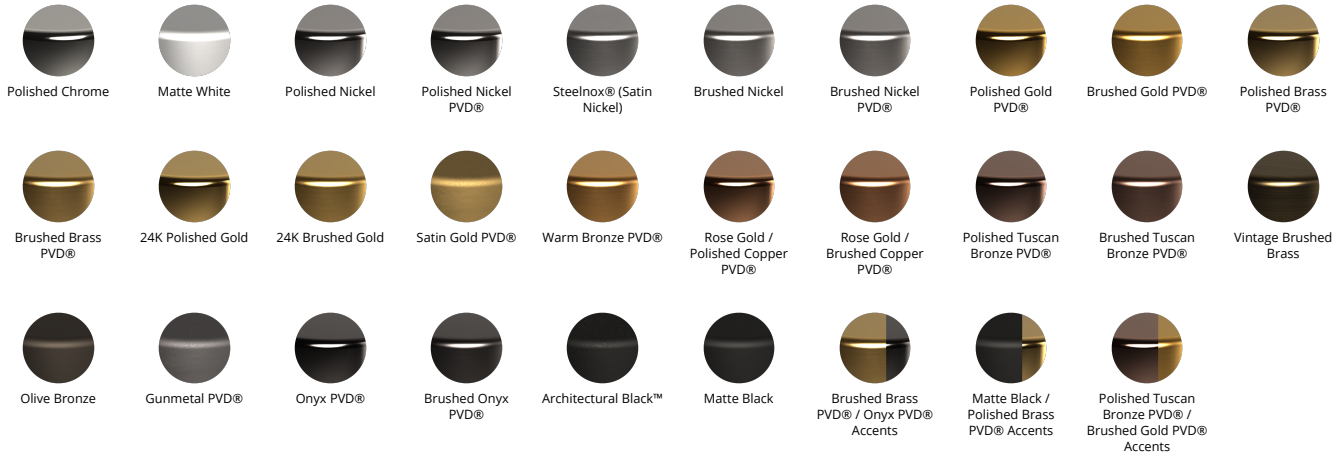

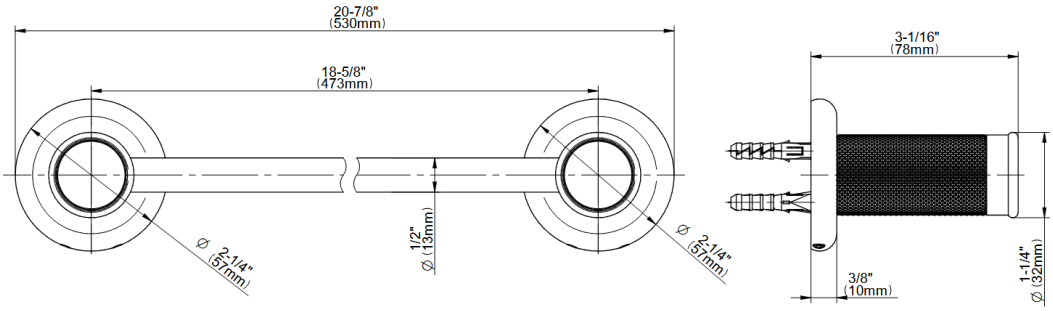

The measurements shown are for reference only. Products and specifications shown are subject to change without notice. Revised 09/2023
www.graff-designs.com | phone: 800-954-4723