RIVA Collection
G-19401TP
RIVA Traditional integrated wall supply elbow, bracket, shelf, and hook

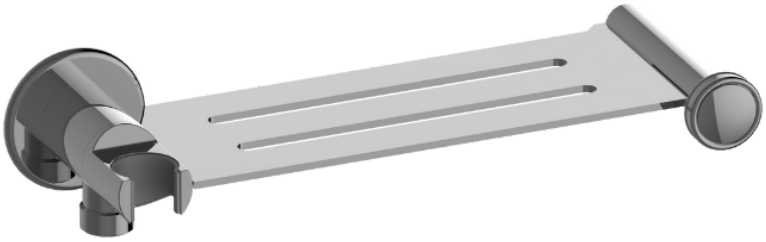

Available Finishes

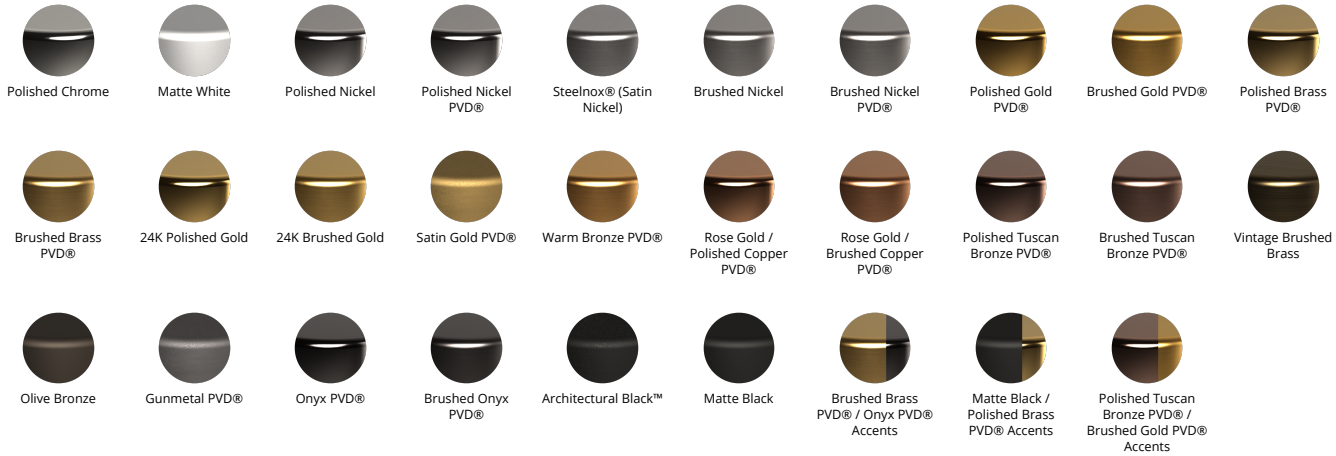
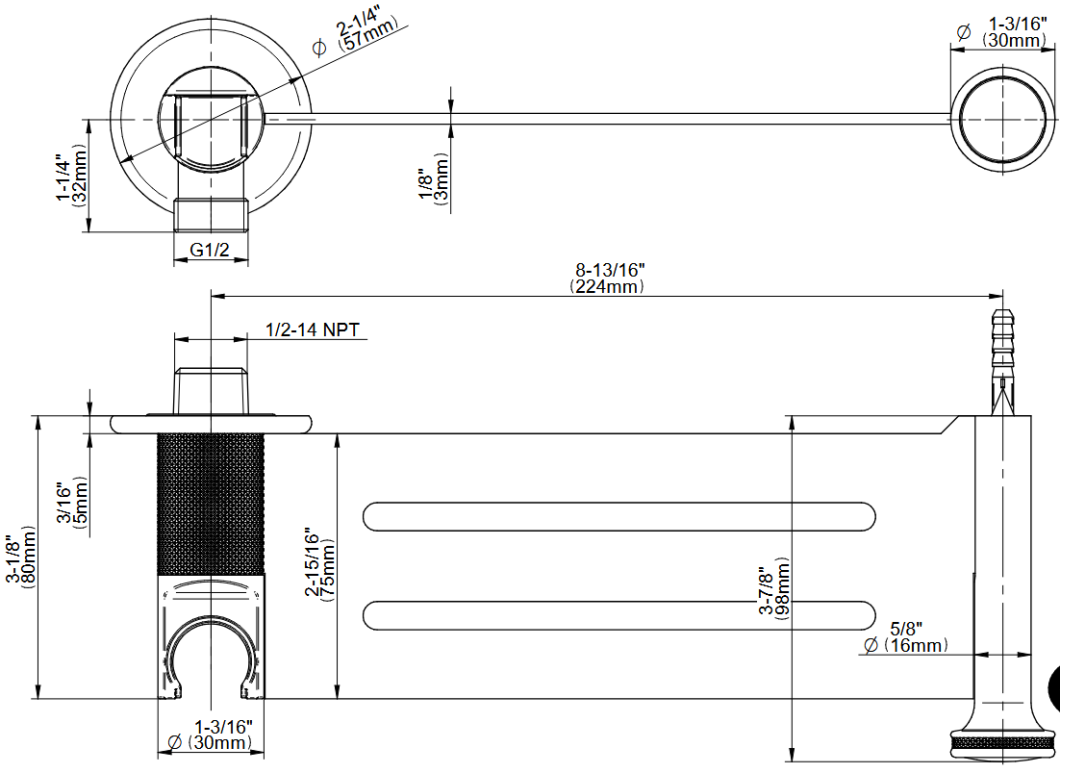
RIVA Collection
G-19401TP
RIVA Traditional integrated wall supply elbow, bracket, shelf, and hook