RIVA Collection

G-19401CD

RIVA Contemporary integrated wall supply elbow, bracket, shelf, and hook diamond knurled

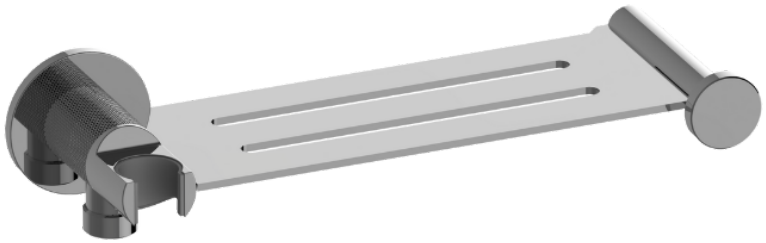

Available Finishes

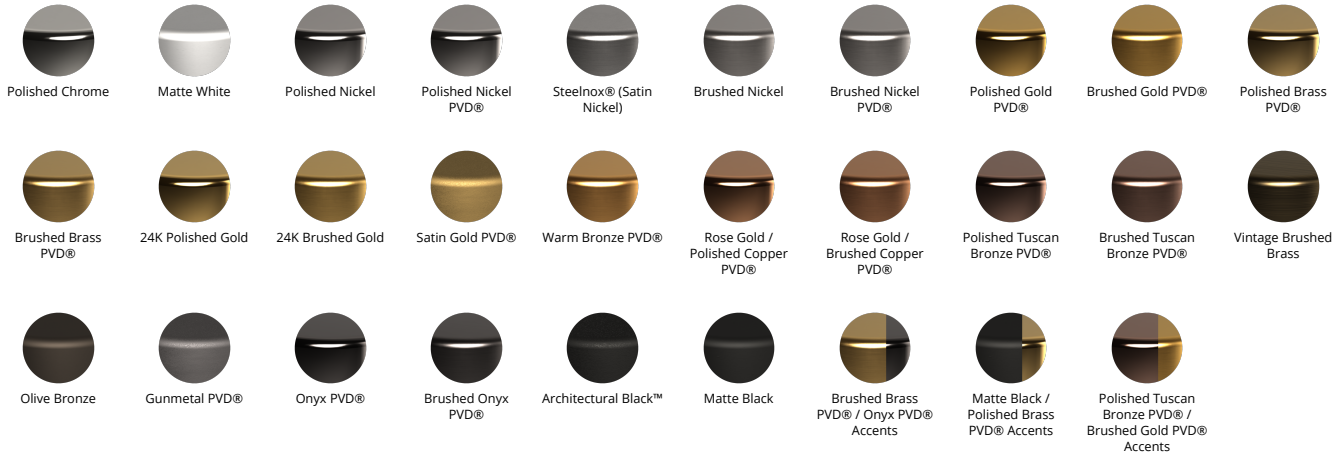
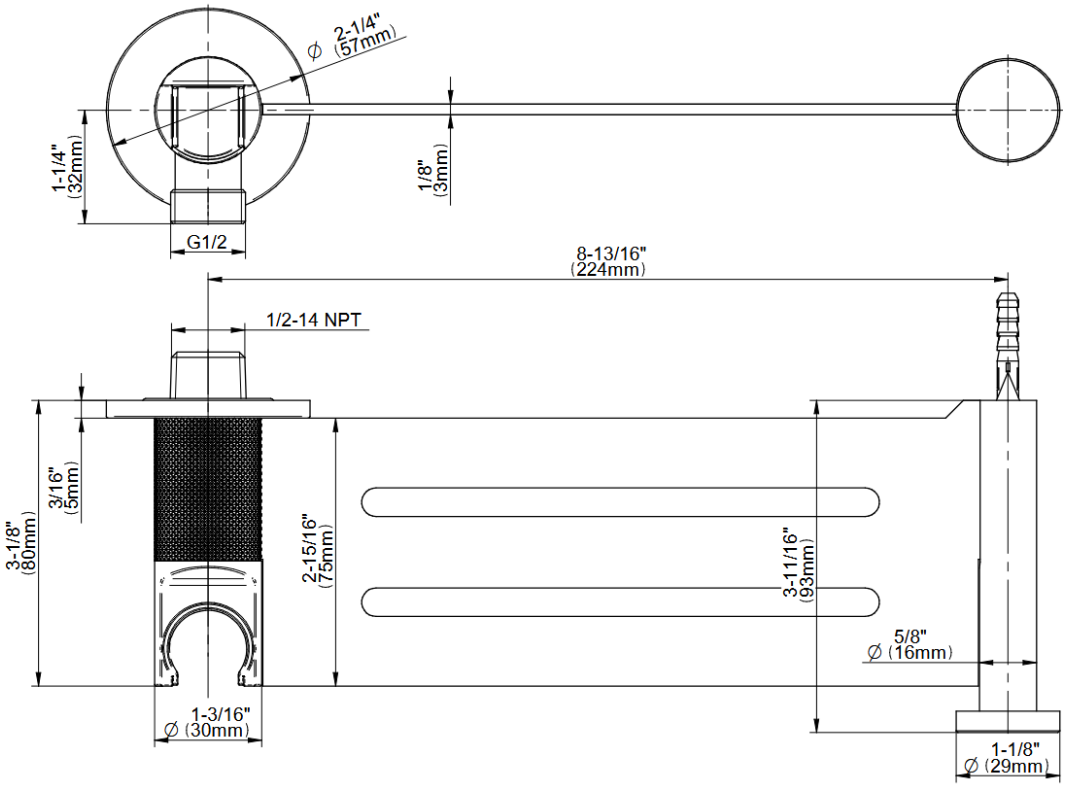
RIVA Collection
G-19401CD
RIVA Contemporary integrated wall supply elbow, bracket, shelf, and hook diamond knurled