RIVA Collection
G-18210SCDP
RIVA Chandelier Contemporary LED with Wall-Mount Button 10-1/16"

Available Finishes

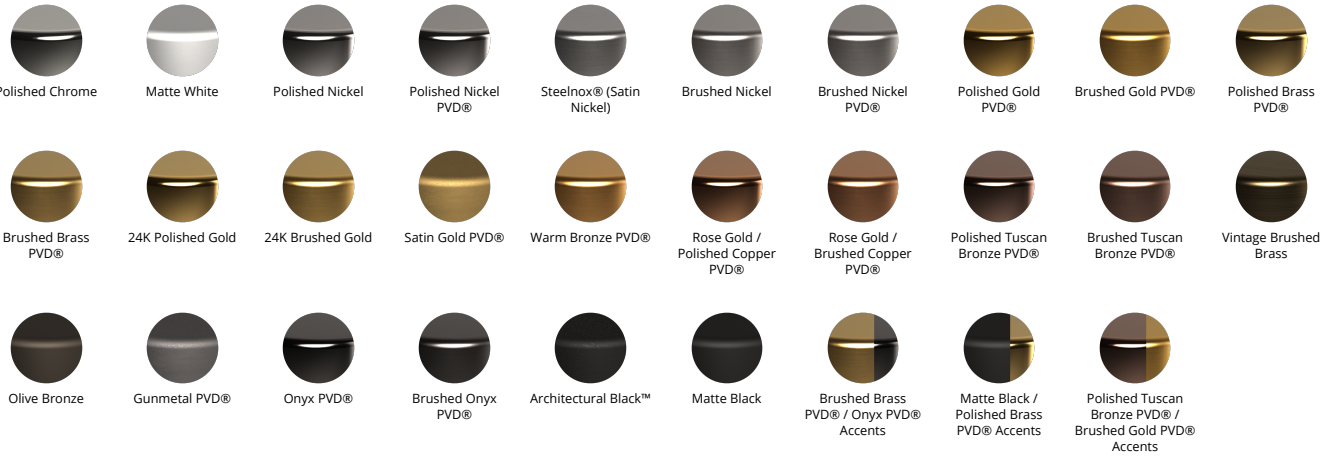
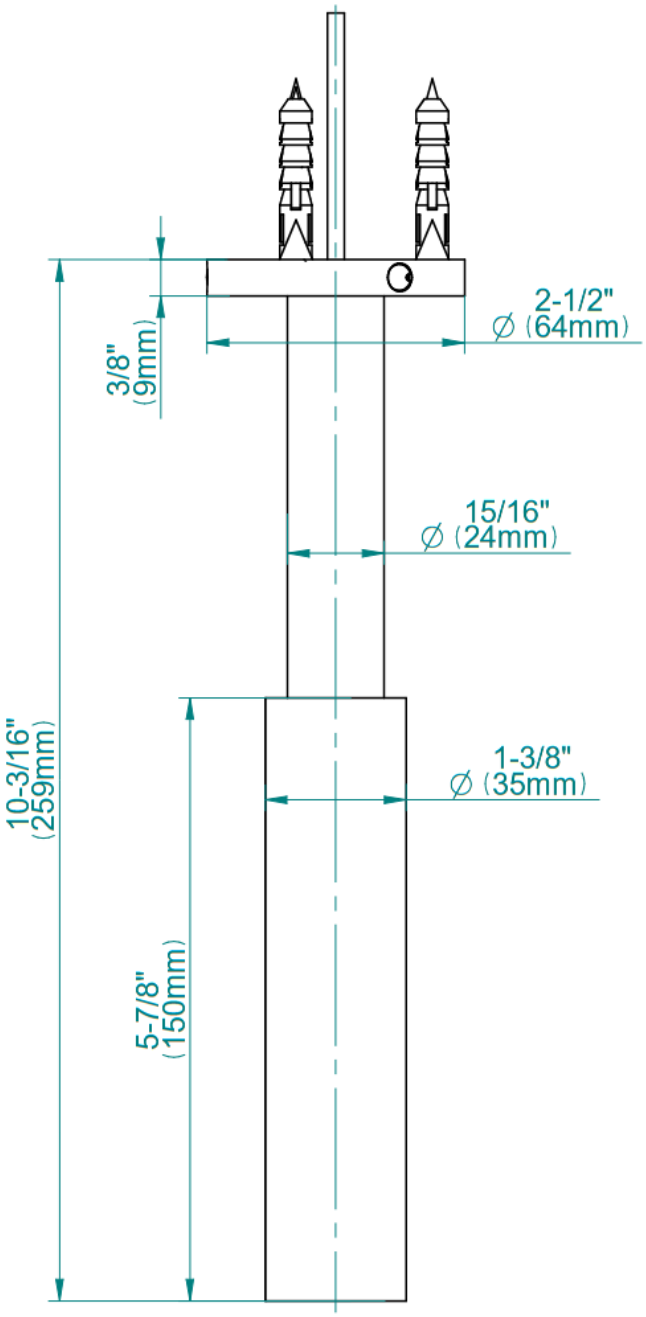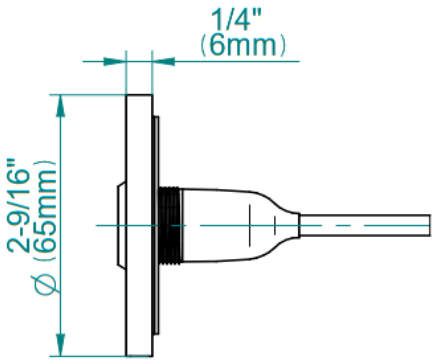
RIVA Collection
G-18210SCDP
RIVA Chandelier Contemporary LED with Wall-Mount Button 10-1/16"