RIVA Collection
G-18203SCIP
RIVA Wall mounted slim shower head and cascade

Available Finishes

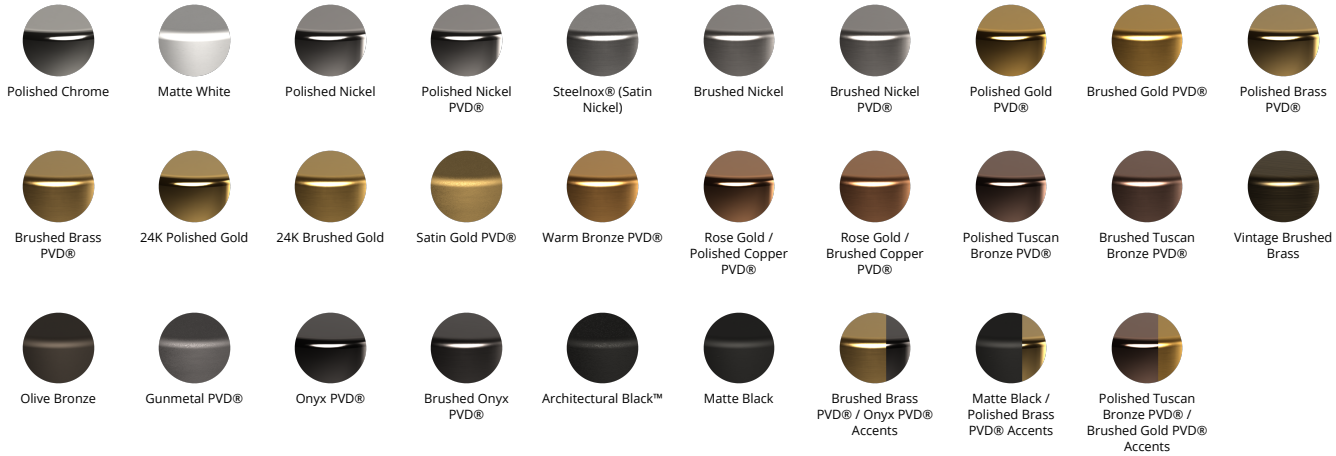
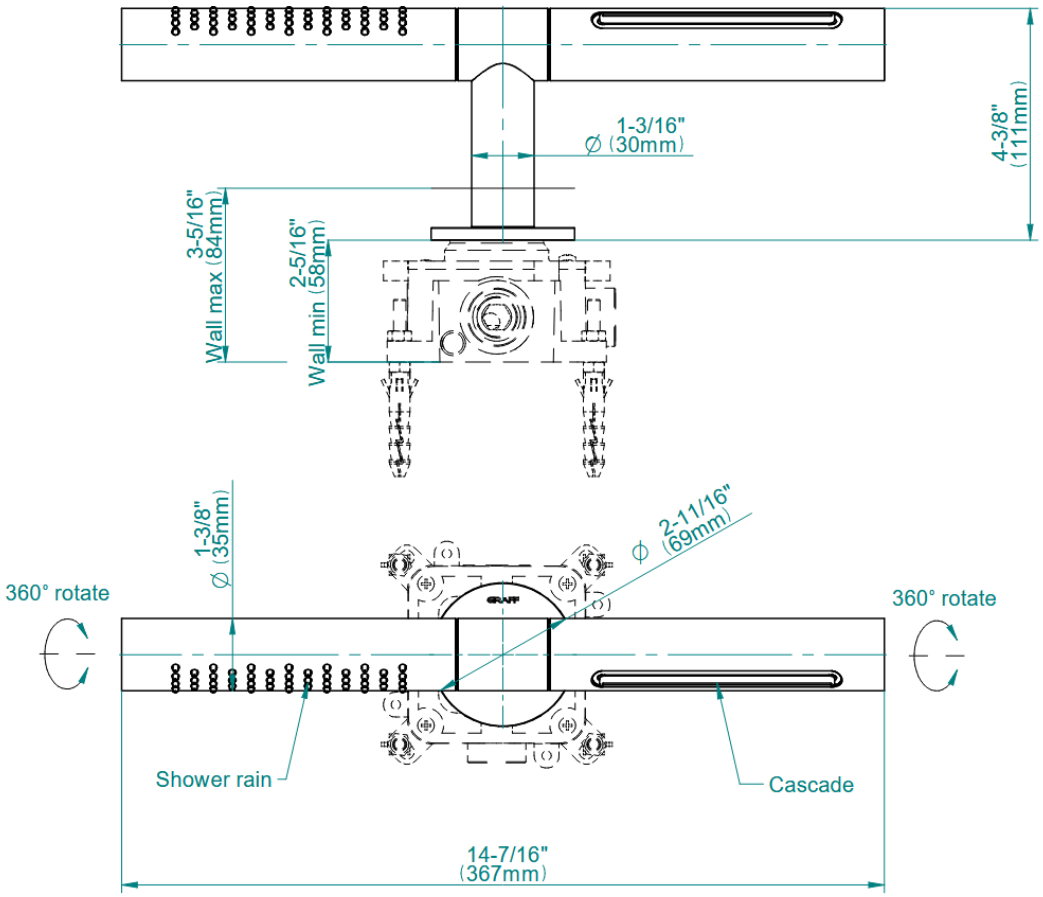
RIVA Collection
G-18203SCIP
RIVA Wall mounted slim shower head and cascade