RIVA Collection
G-18025VBP-T
RIVA Contemporary 5-button paired knob vertical trim

Available Finishes

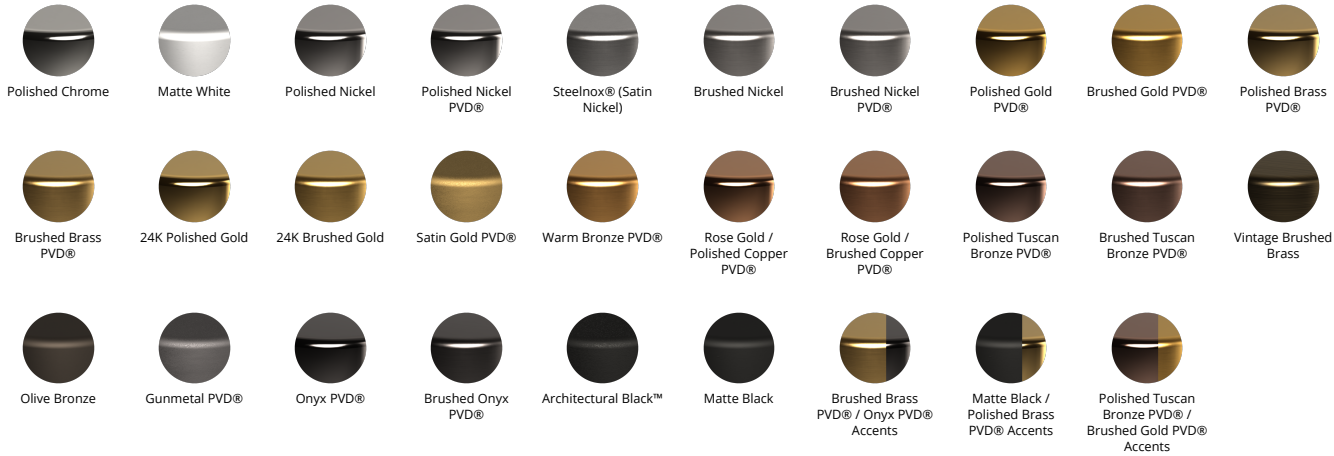
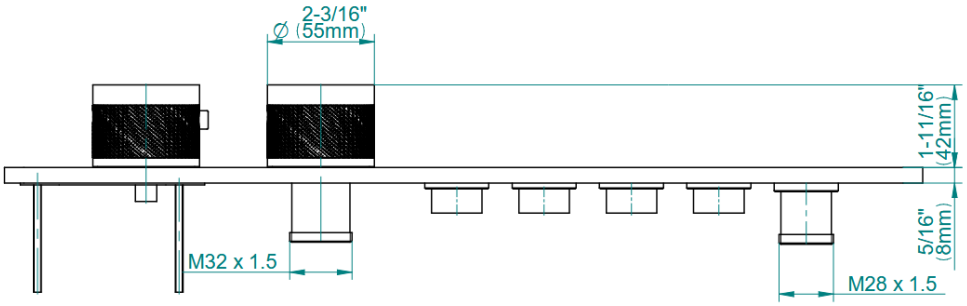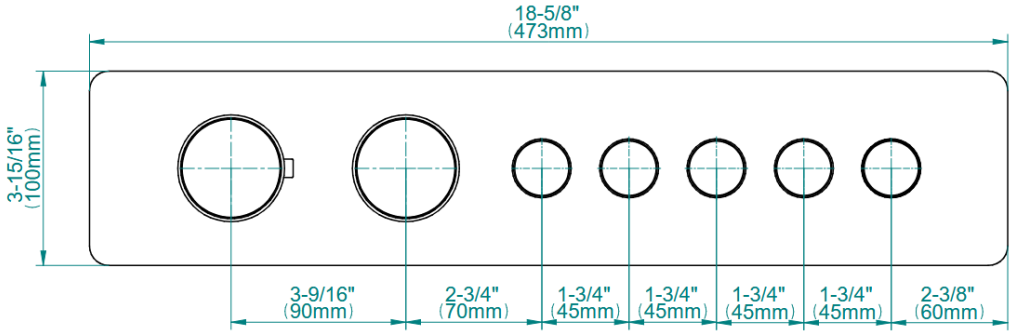
RIVA Collection
G-18025VBP-T
RIVA Contemporary 5-button paired knob vertical trim