RIVA Collection
G-18025VBD-T
RIVA Contemporary 5-button paired knob diamond knurl vertical trim

Available Finishes

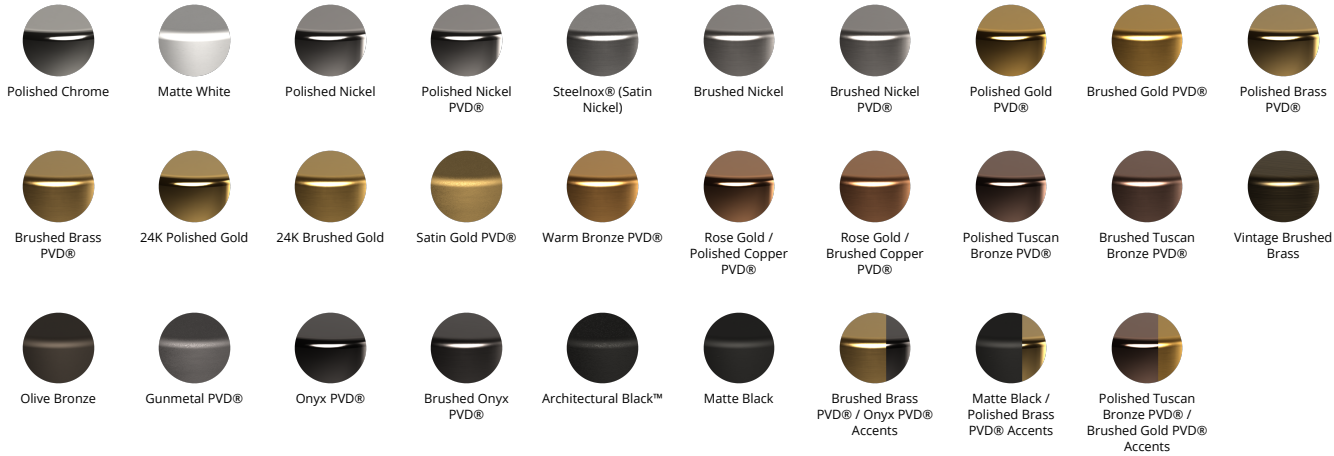
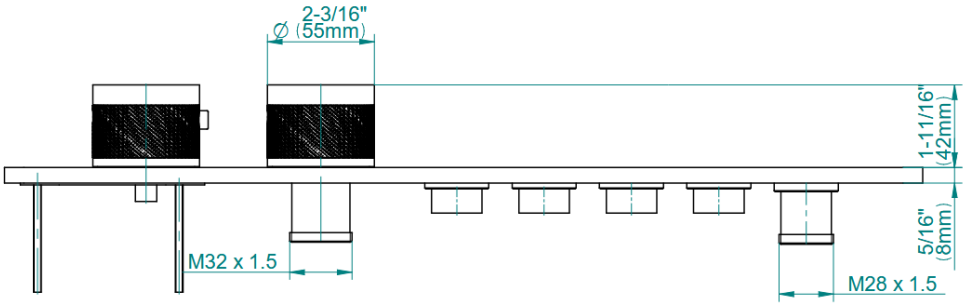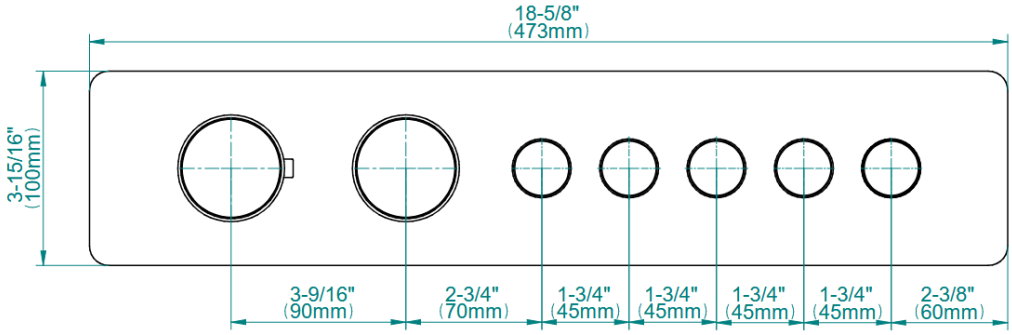
RIVA Collection
G-18025VBD-T
RIVA Contemporary 5-button paired knob diamond knurl vertical trim