RIVA Collection
G-18025HBD-T
RIVA Contemporary 5-button paired knob diamond knurl horizontal trim

Available Finishes

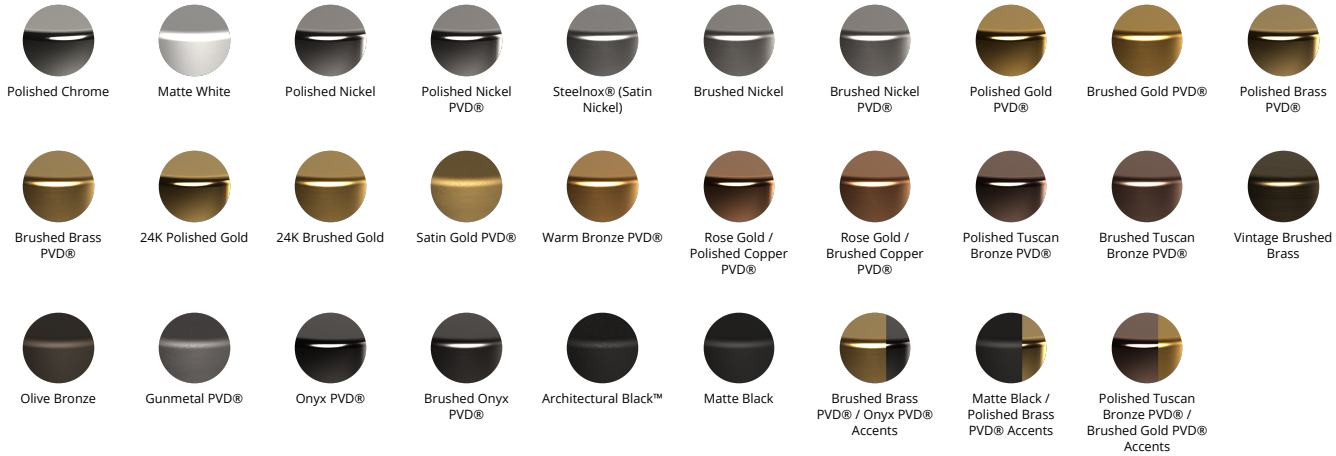
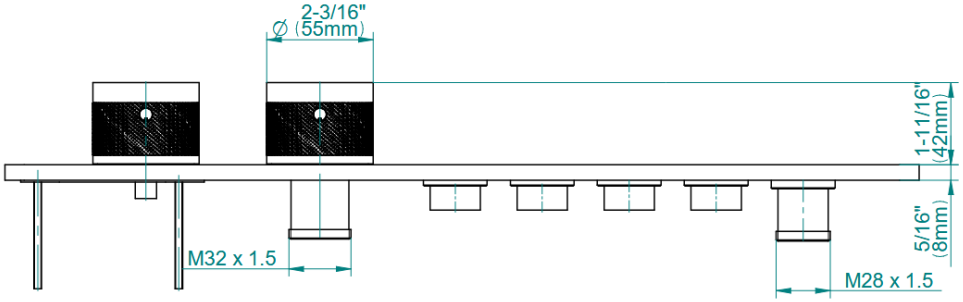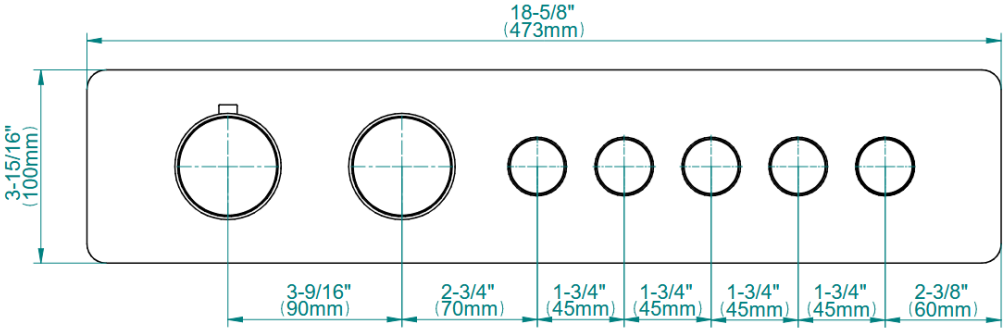
RIVA Collection
G-18025HBD-T
RIVA Contemporary 5-button paired knob diamond knurl horizontal trim