RIVA Collection
G-18025HAP-T
RIVA Contemporary 5-button split knob horizontal trim

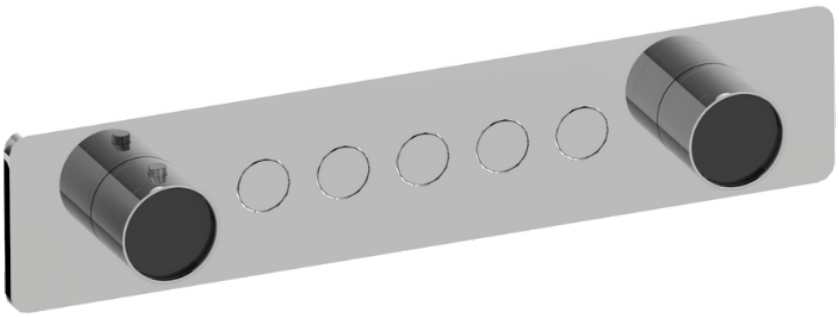

Available Finishes

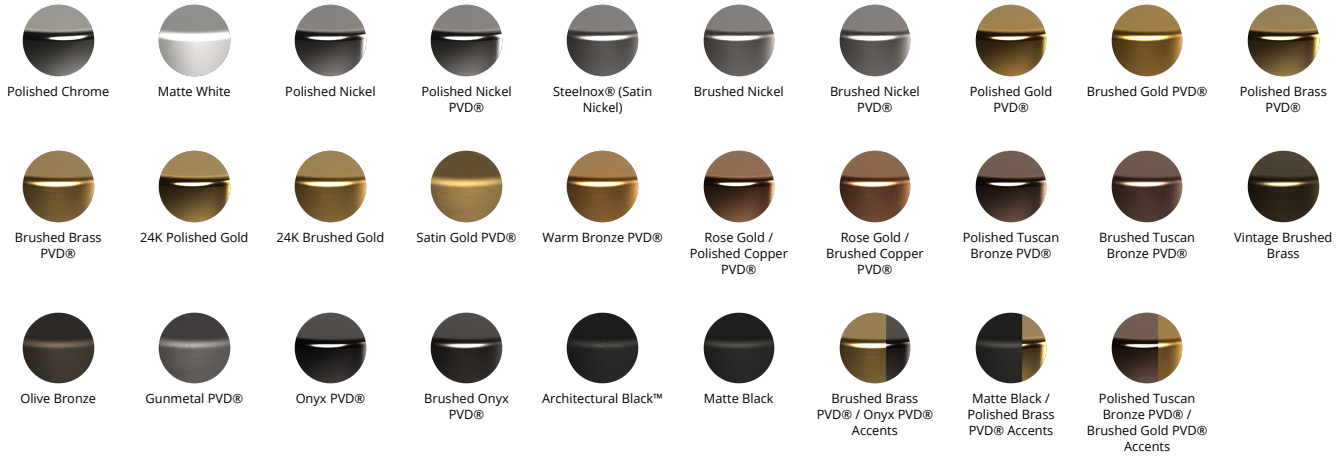
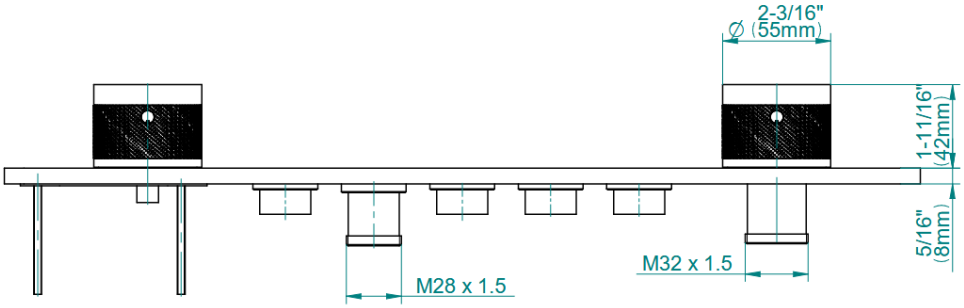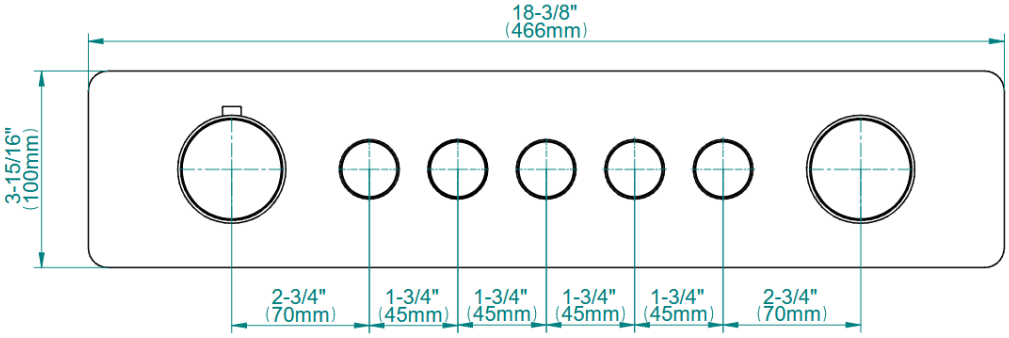
RIVA Collection
G-18025HAP-T
RIVA Contemporary 5-button split knob horizontal trim