RIVA Collection
G-18024VBP-T
RIVA Contemporary 4-button paired knob vertical trim

Available Finishes

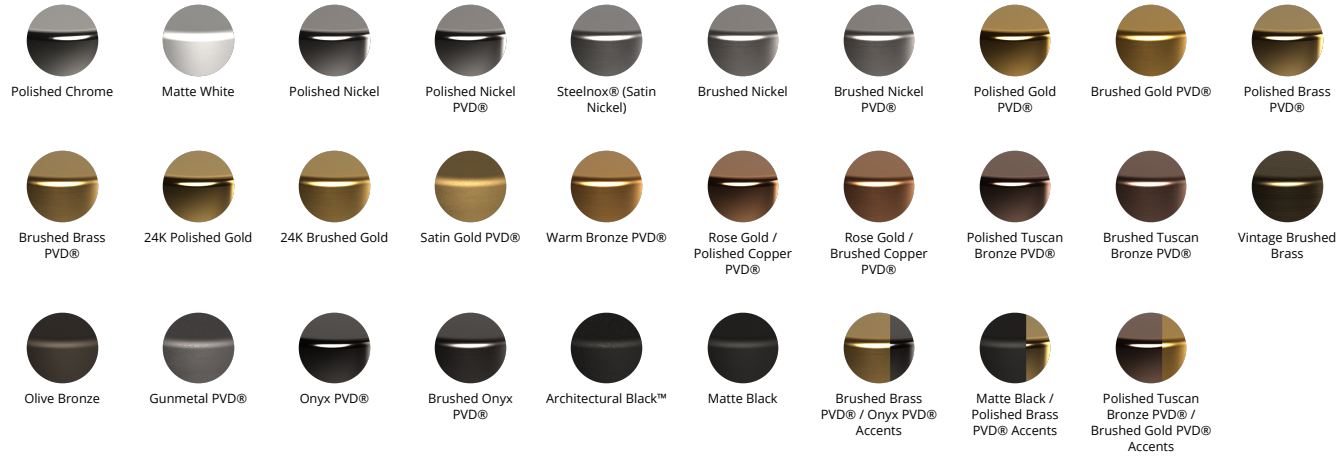
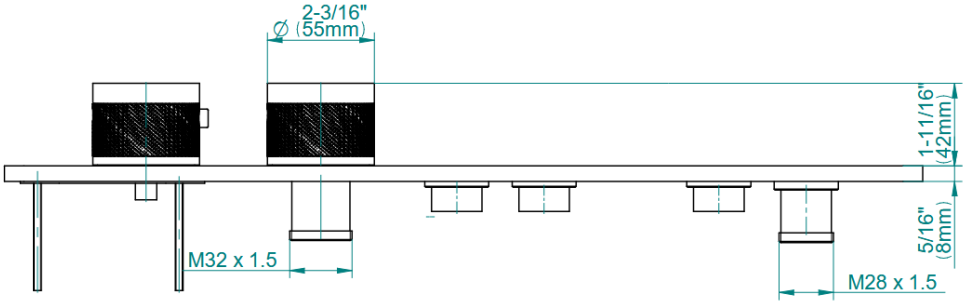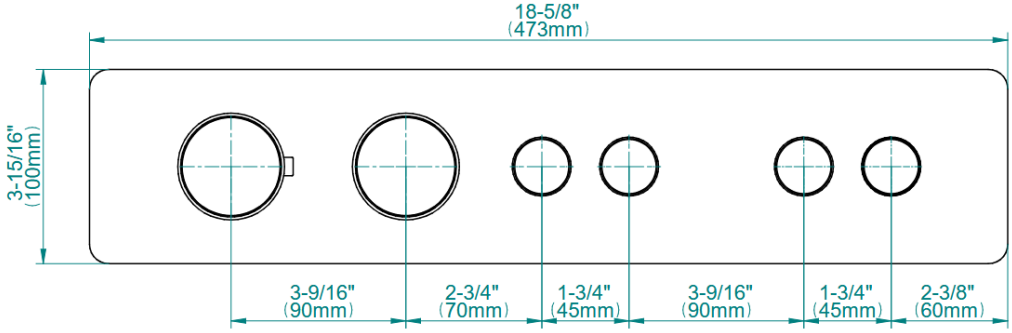
RIVA Collection
G-18024VBP-T
RIVA Contemporary 4-button paired knob vertical trim