RIVA Collection
G-18024VAP-T
RIVA Contemporary 4-button split knob vertical trim

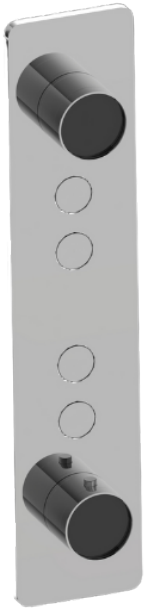

Available Finishes

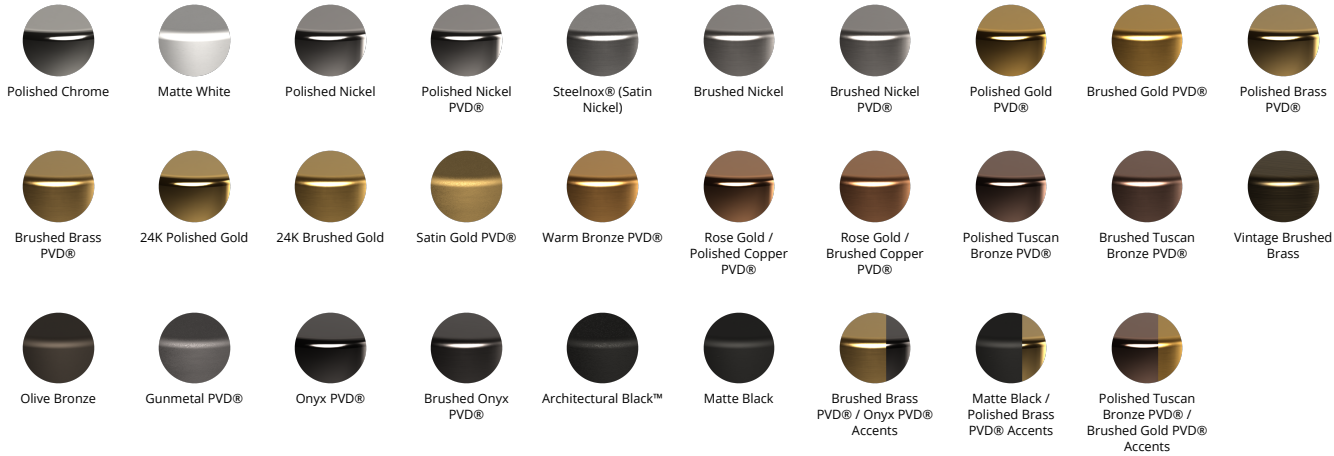
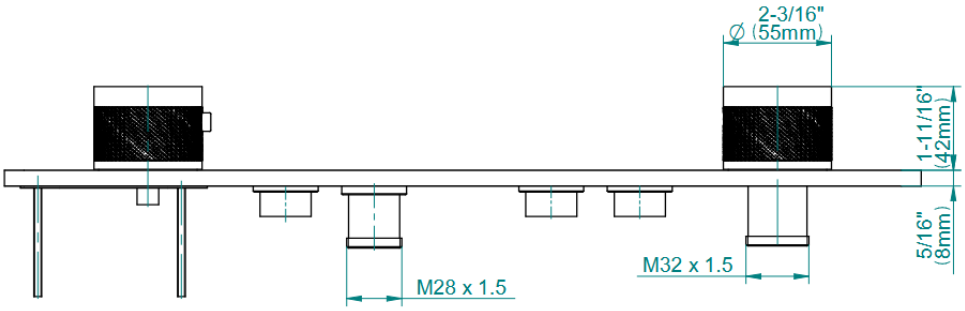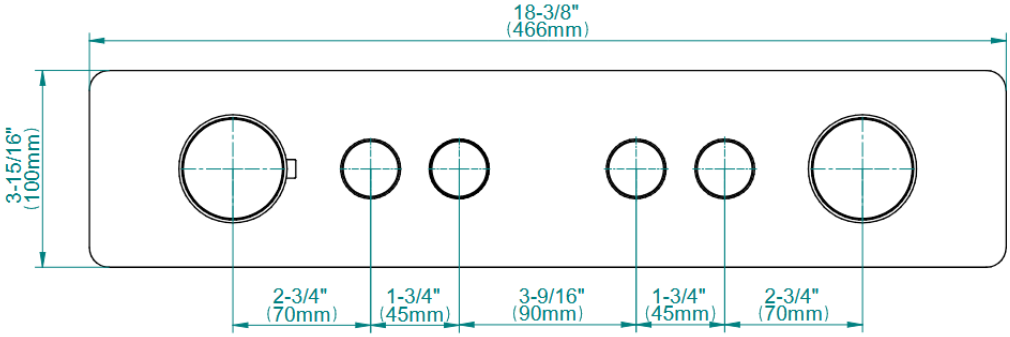
RIVA Collection
G-18024VAP-T
RIVA Contemporary 4-button split knob vertical trim