RIVA Collection
G-18024VAD-T
RIVA Contemporary 4-button split knob diamond knurl vertical trim

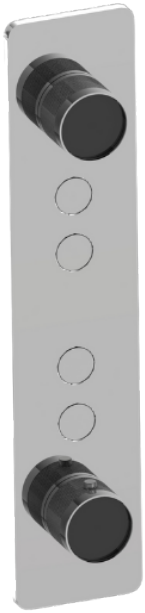

Available Finishes

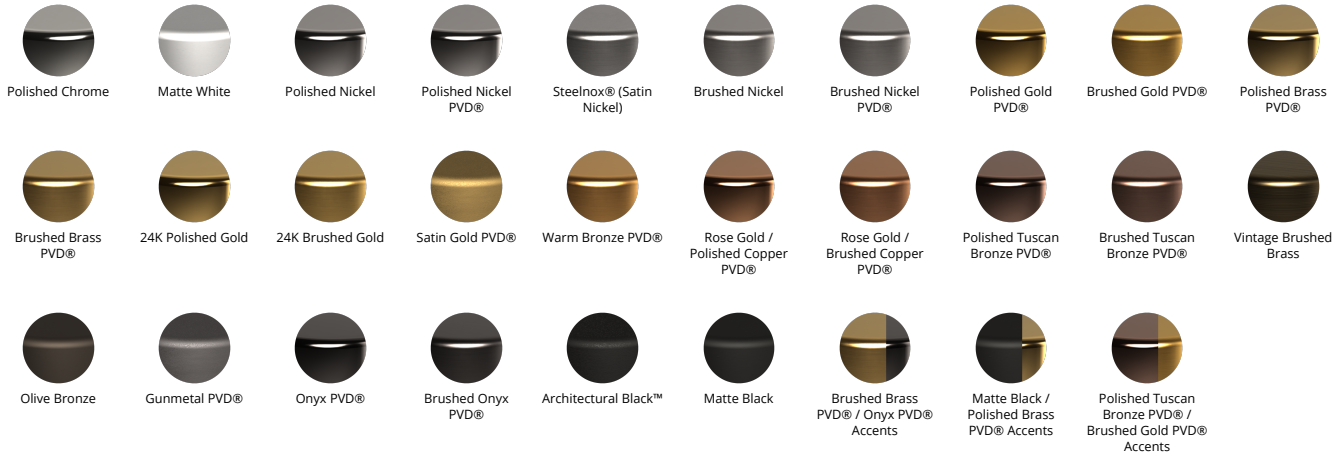
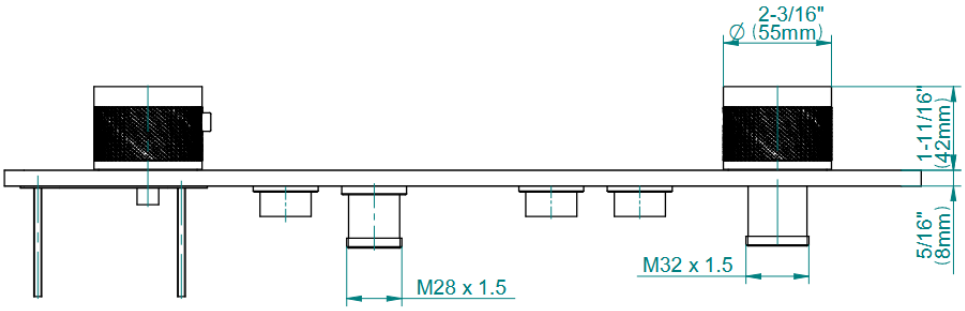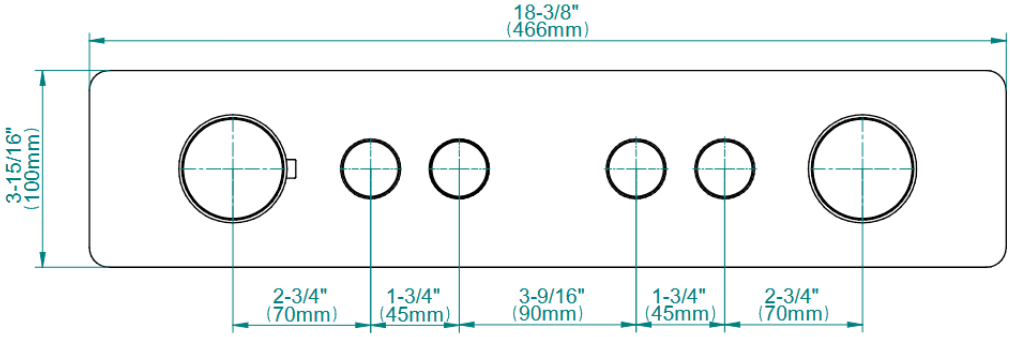
RIVA Collection
G-18024VAD-T
RIVA Contemporary 4-button split knob diamond knurl vertical trim