RIVA Collection
G-18024HBP-T
RIVA Contemporary 4-button paired knob horizontal trim

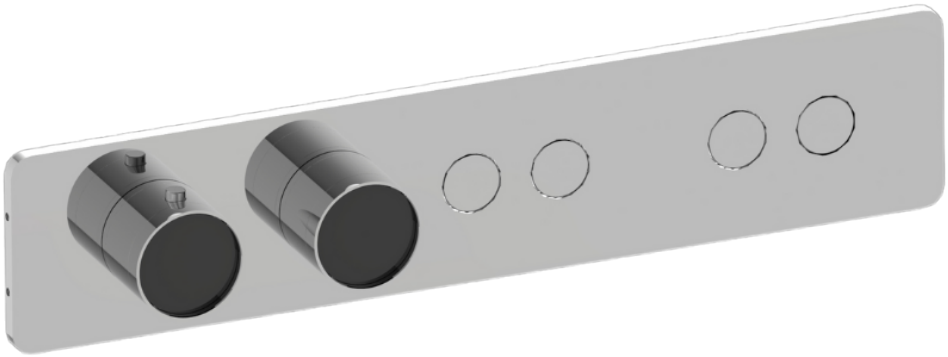

Available Finishes

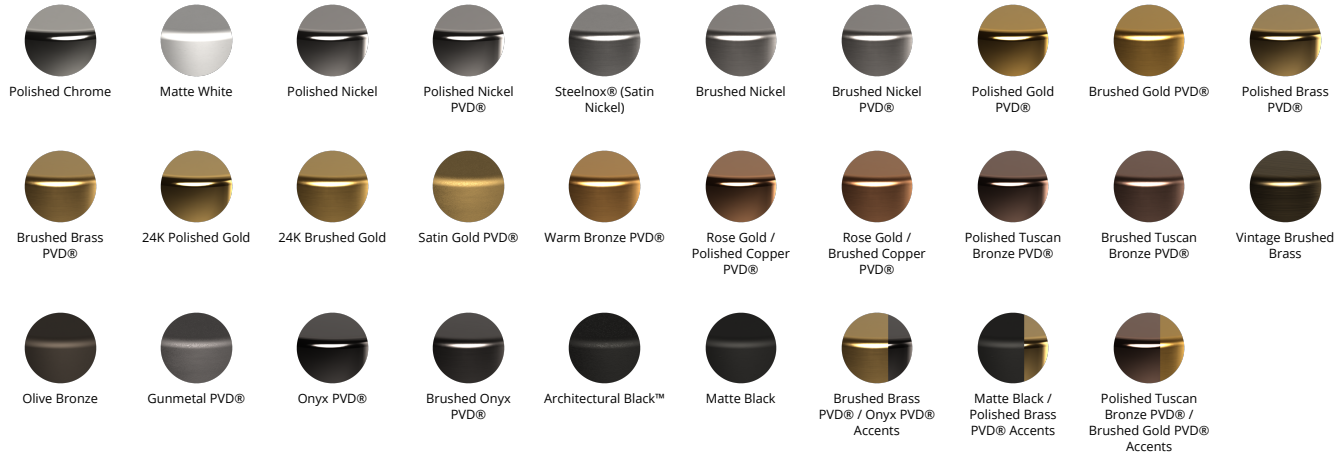
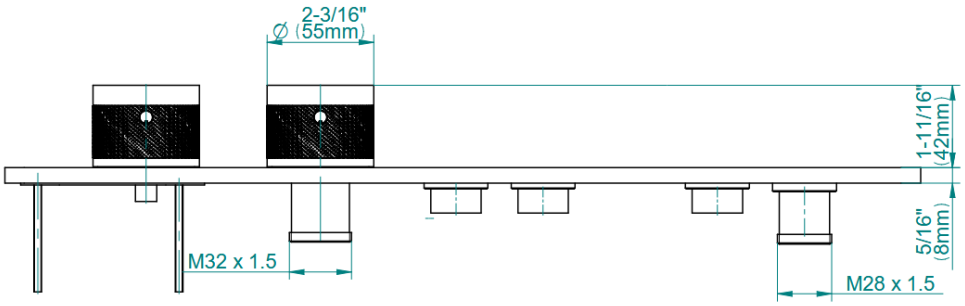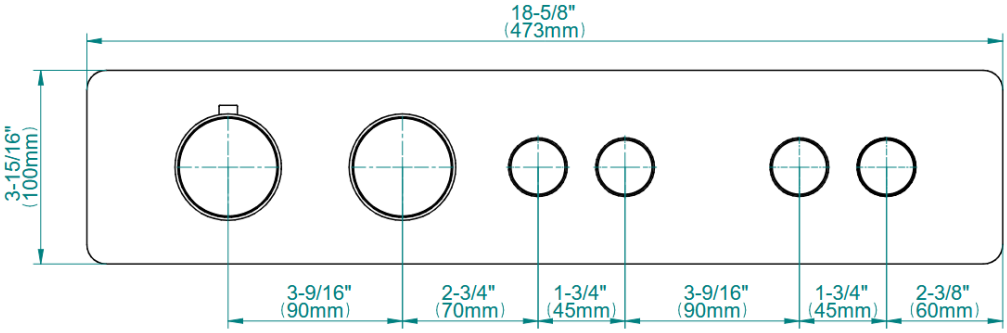
RIVA Collection
G-18024HBP-T
RIVA Contemporary 4-button paired knob horizontal trim