RIVA Collection
G-18023VAQ-T
RIVA Contemporary 3-button split knob oblique knurl vertical trim

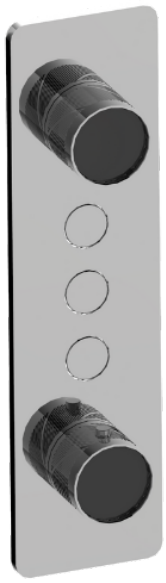

Available Finishes

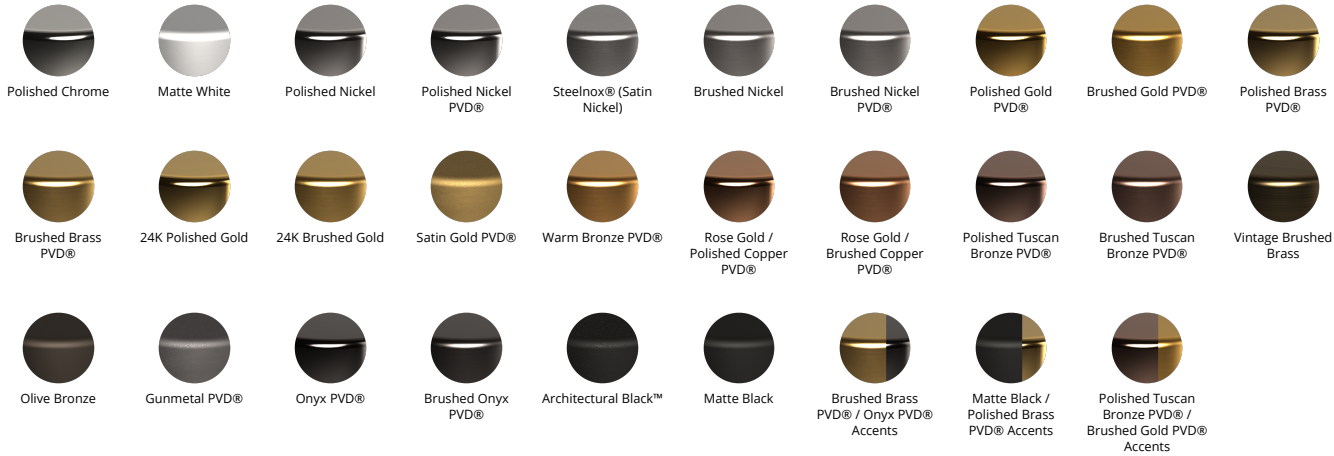
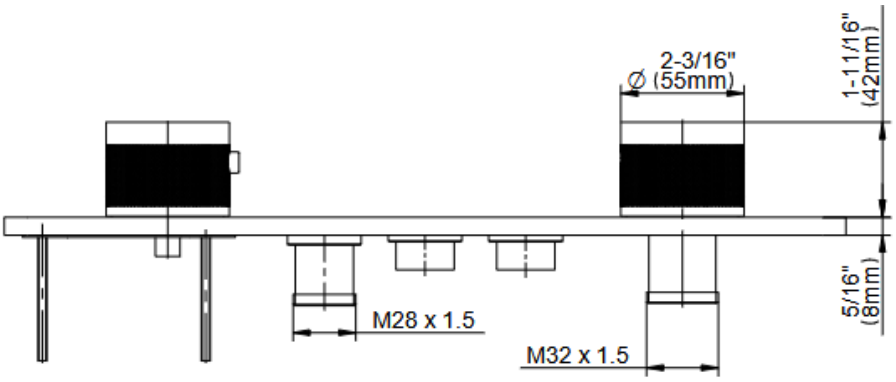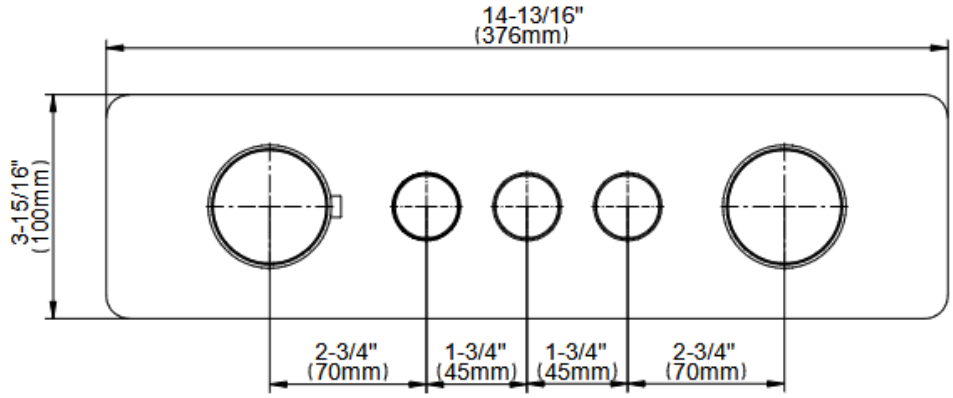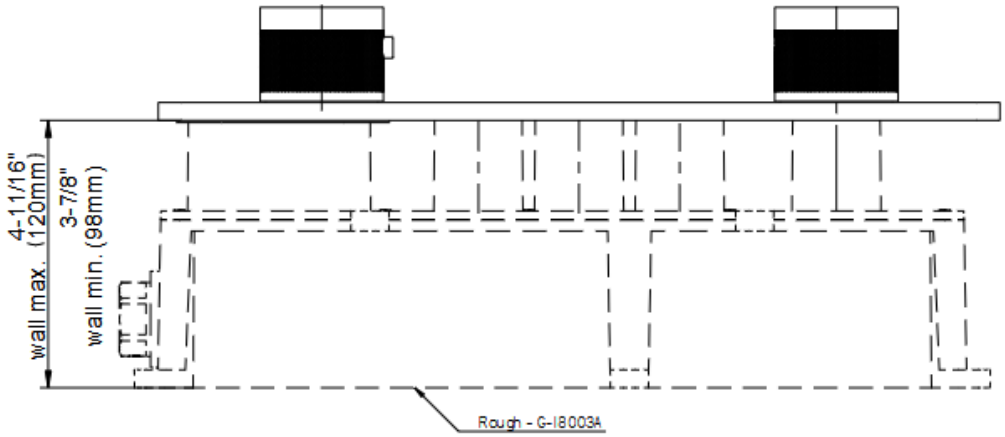
RIVA Collection
G-18023VAQ-T
RIVA Contemporary 3-button split knob oblique knurl vertical trim