RIVA Collection
G-18023RDP-T
RIVA Contemporary 3-button round trim

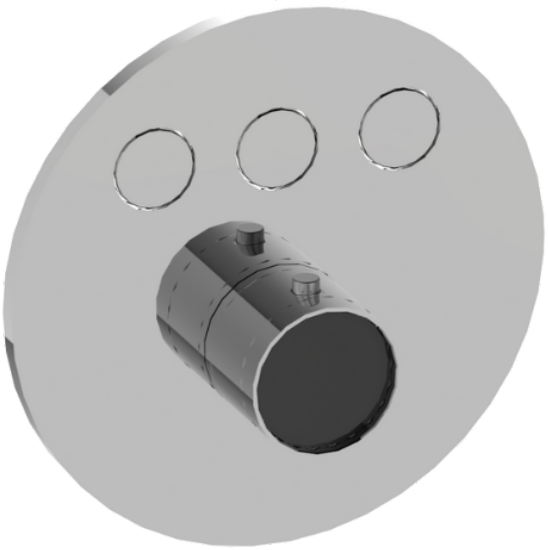

Available Finishes

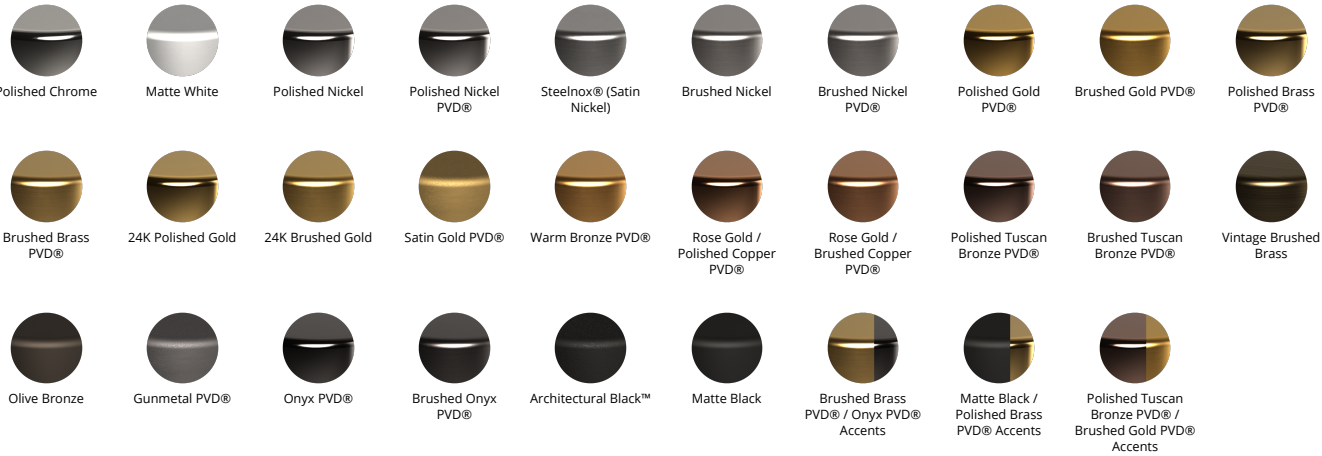
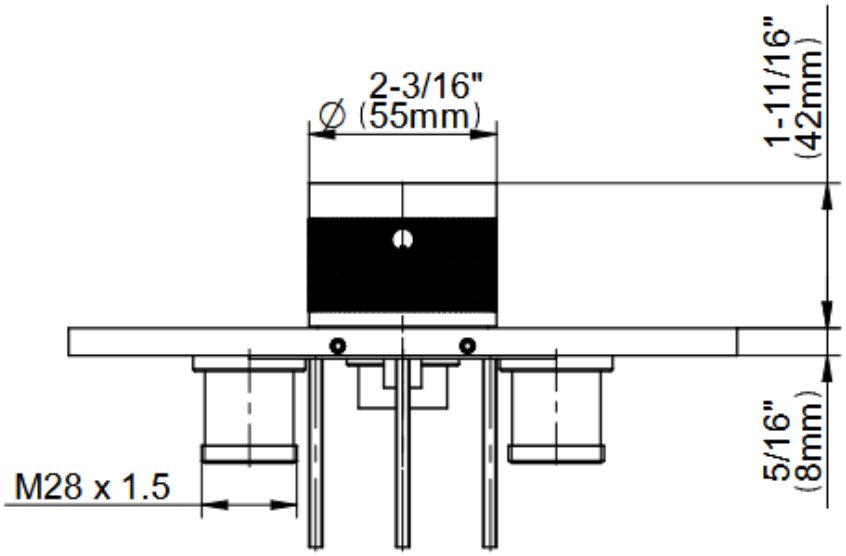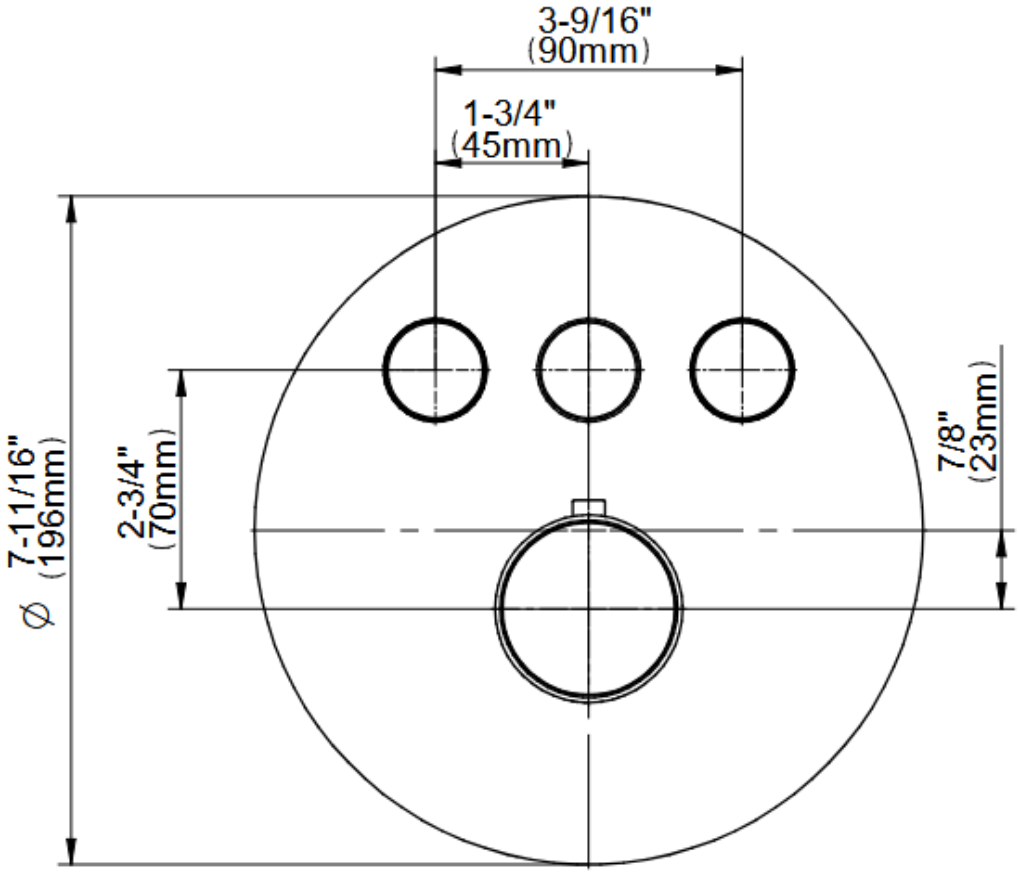
RIVA Collection
G-18023RDP-T
RIVA Contemporary 3-button round trim