RIVA Collection
G-18023RDD-T
RIVA Contemporary 3-button diamond knurl round trim

Available Finishes

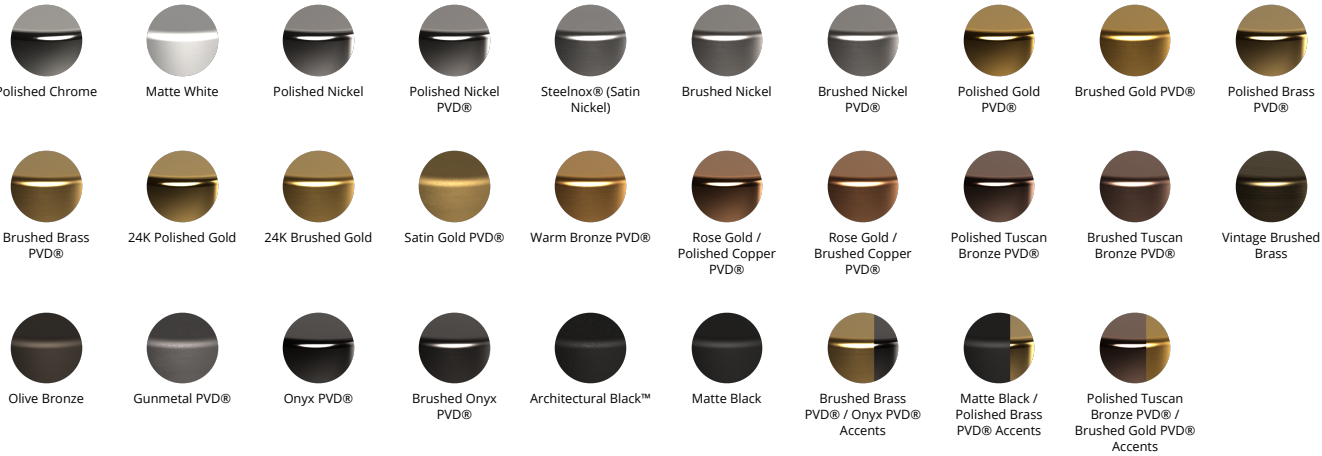
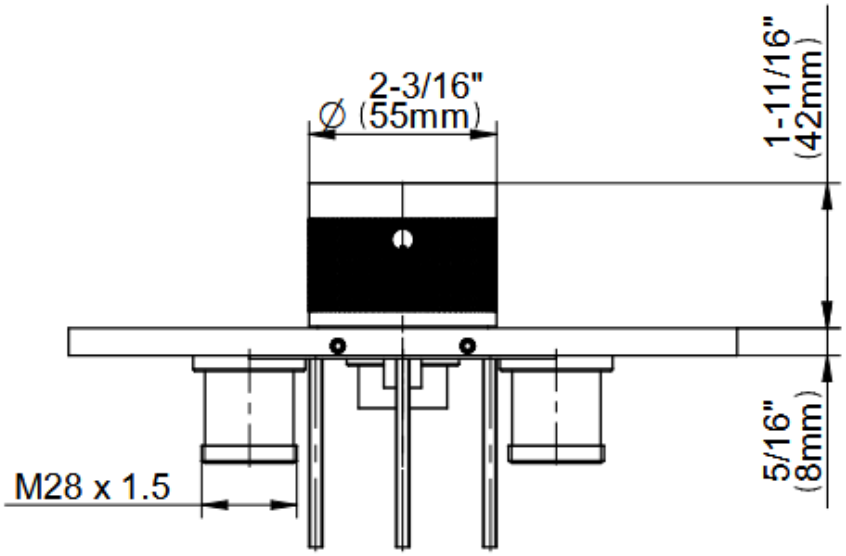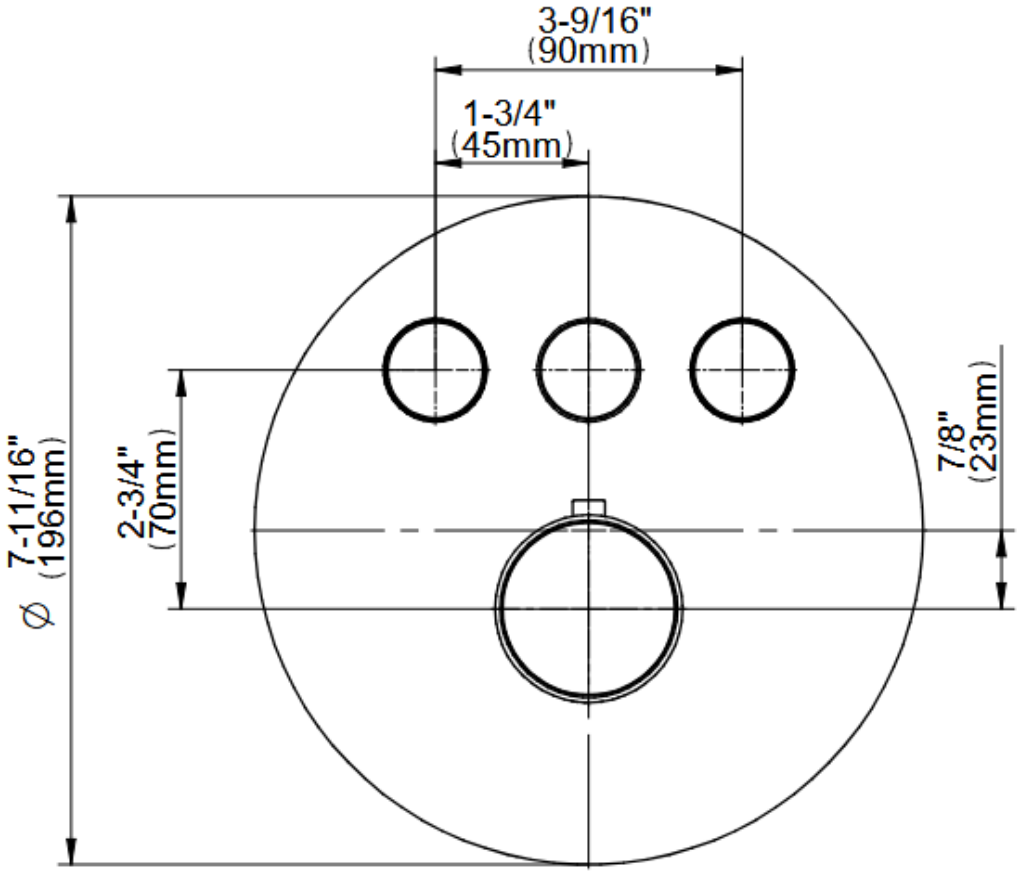
RIVA Collection
G-18023RDD-T
RIVA Contemporary 3-button diamond knurl round trim