RIVA Collection
G-18023CCP-T
RIVA Contemporary 3-button compact trim

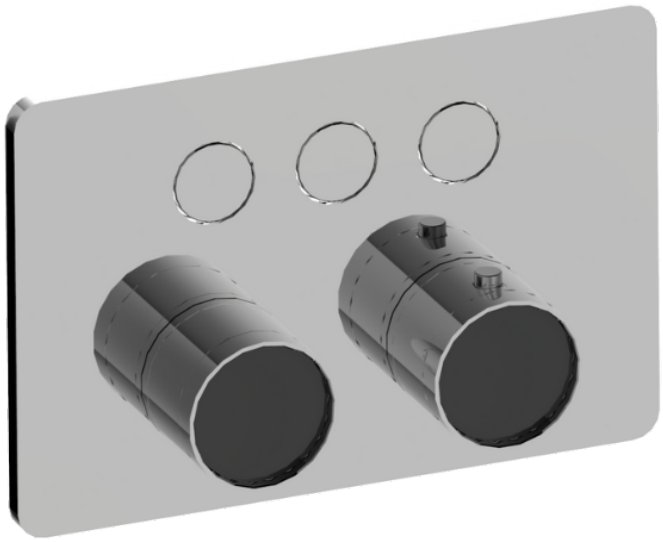

Available Finishes

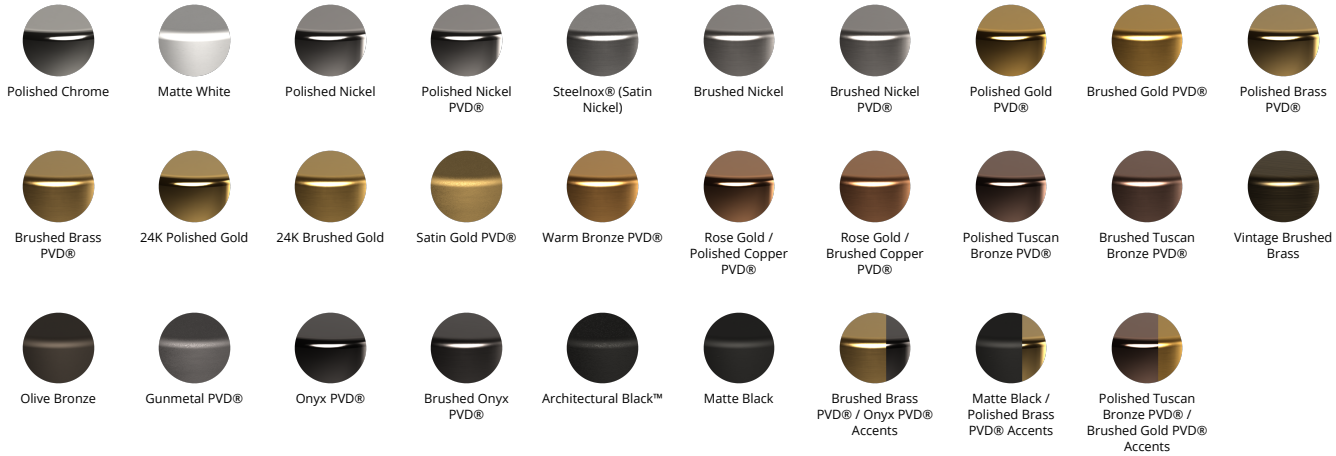
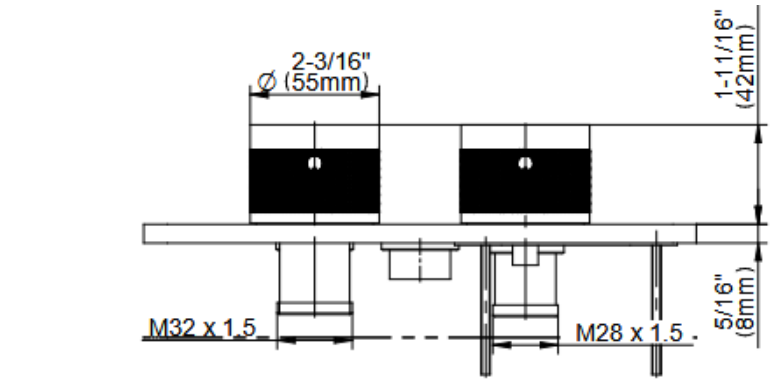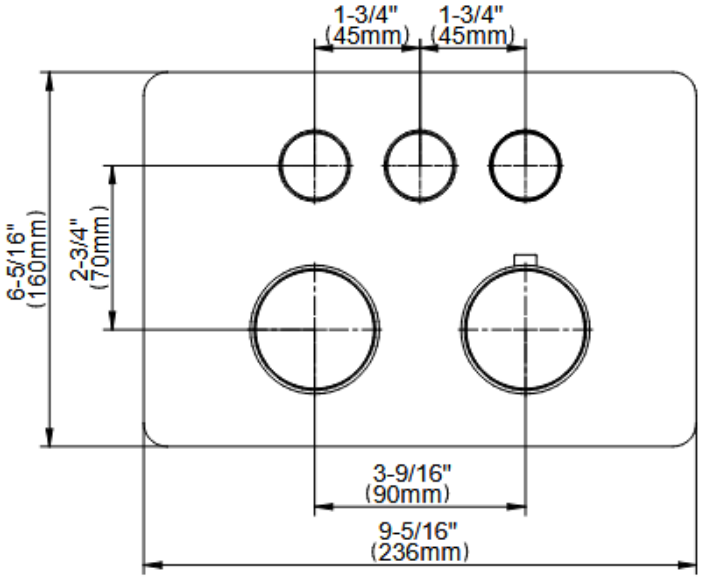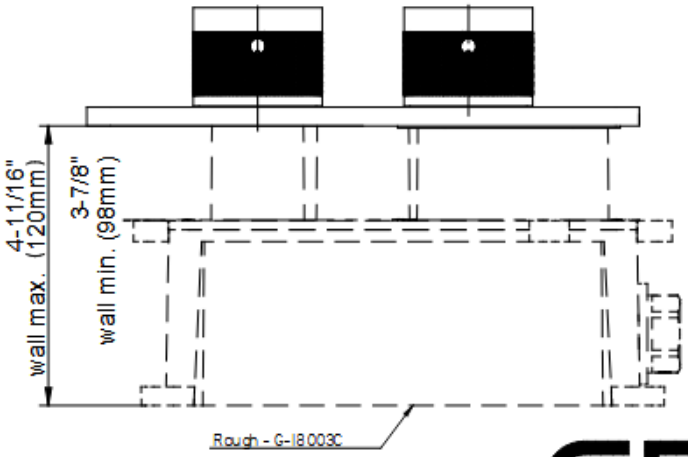
RIVA Collection
G-18023CCP-T
RIVA Contemporary 3-button compact trim