RIVA Collection
G-18023CCD-T
RIVA Contemporary 3-button diamond knurl compact trim

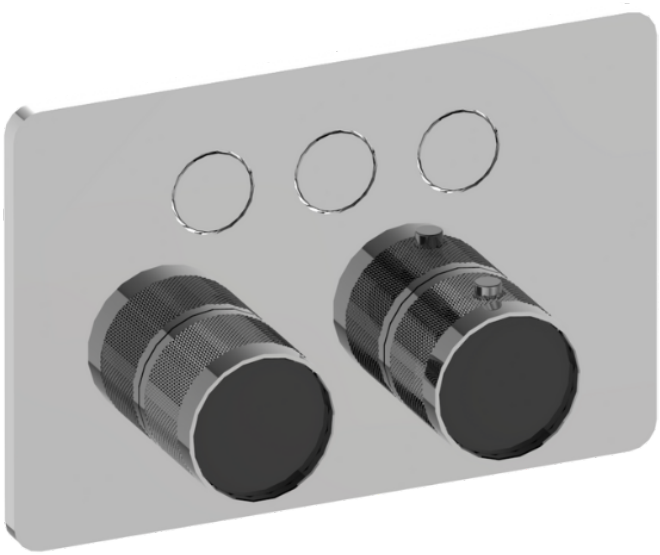

Available Finishes

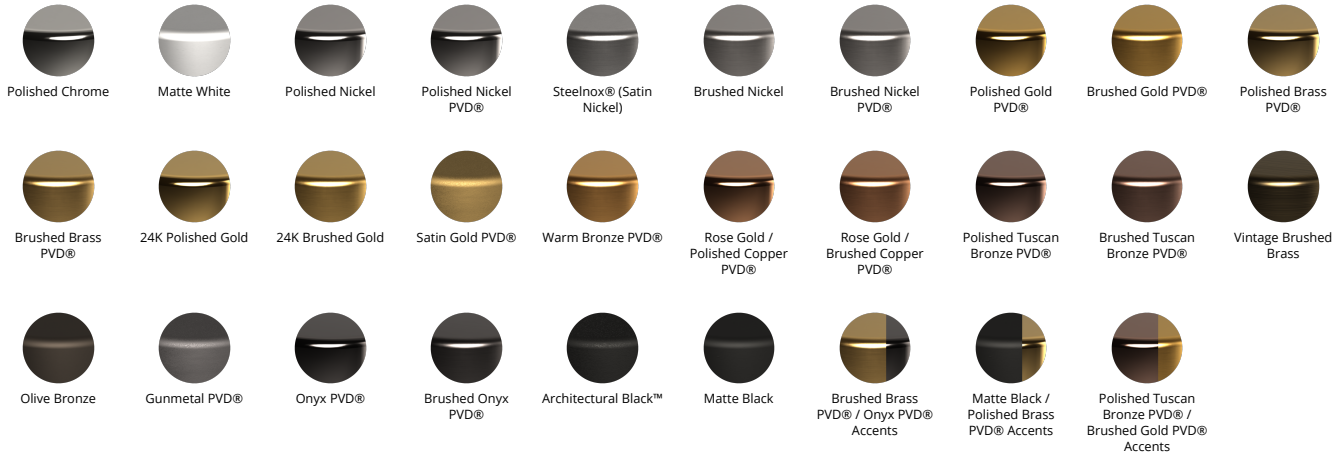
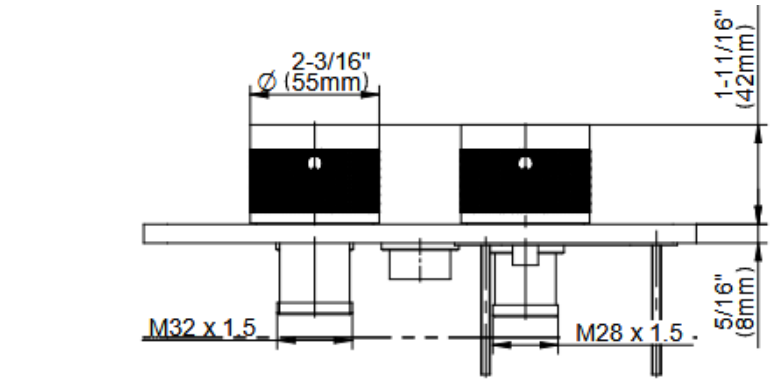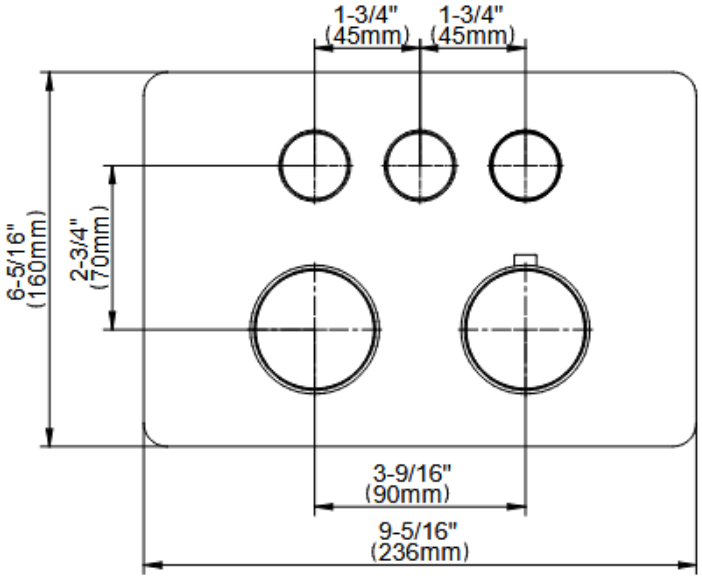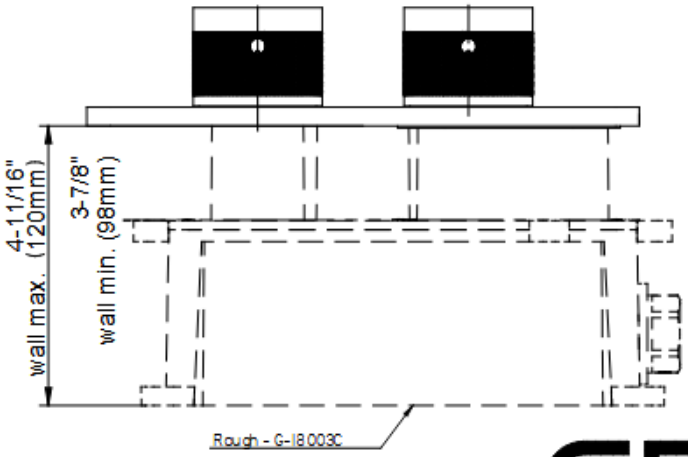
RIVA Collection
G-18023CCD-T
RIVA Contemporary 3-button diamond knurl compact trim