RIVA Collection
G-18022VBP-T
RIVA Contemporary 2-button paired knob vertical trim

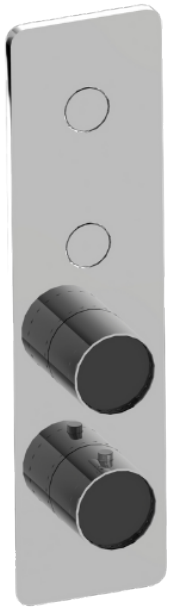

Available Finishes

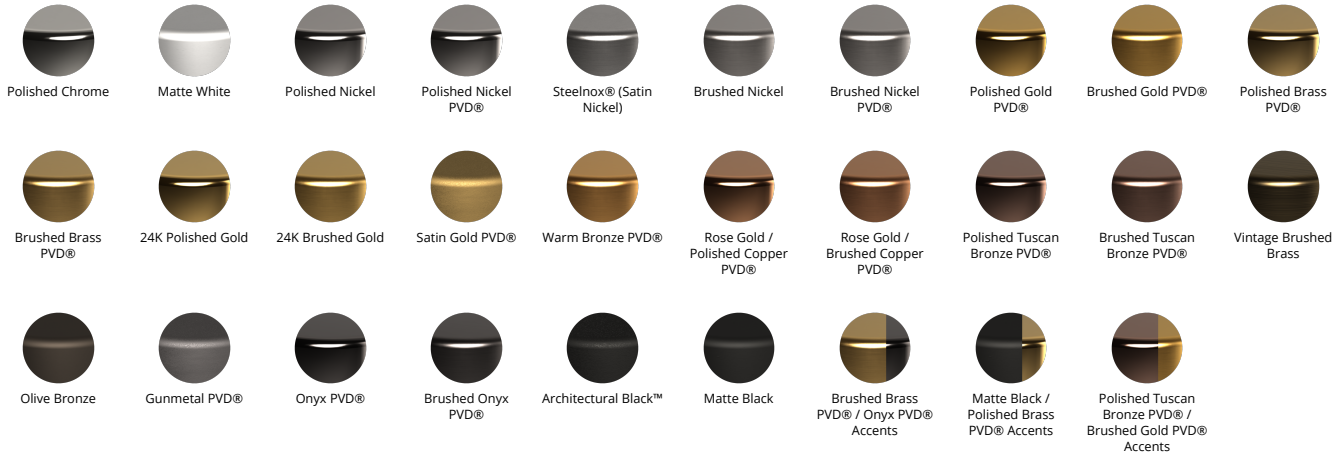
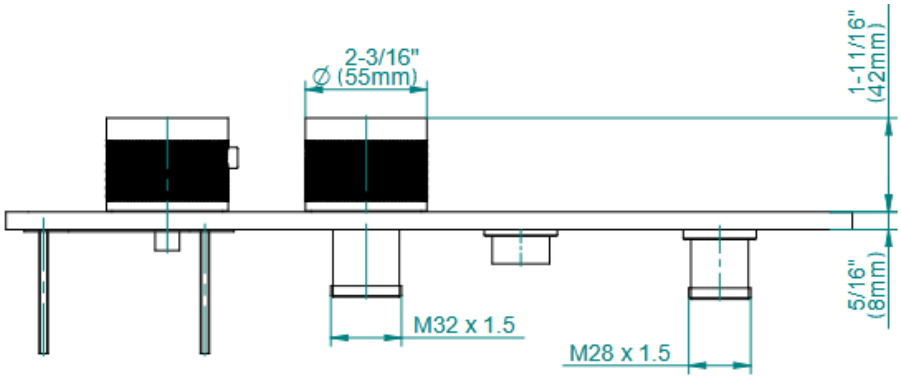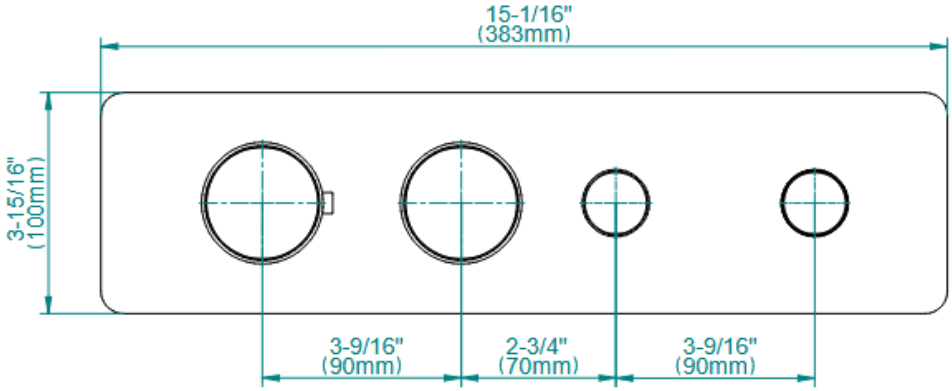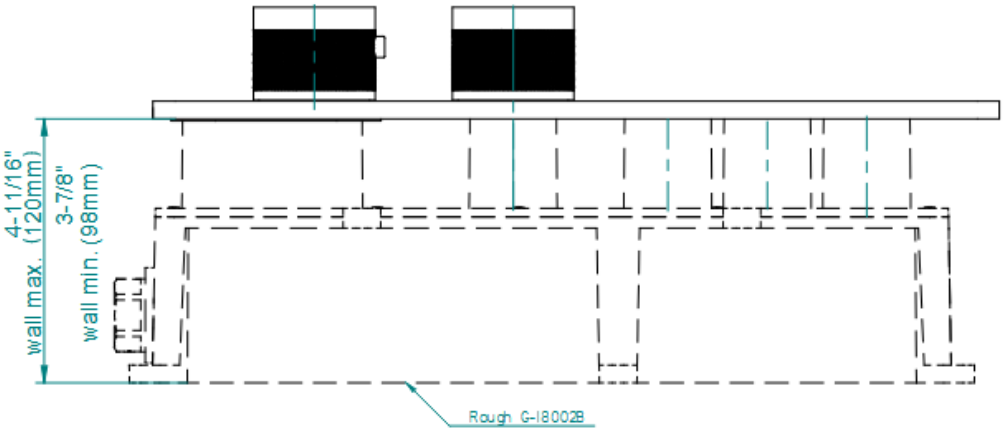
RIVA Collection
G-18022VBP-T
RIVA Contemporary 2-button paired knob vertical trim