RIVA Collection
G-18022VBD-T
RIVA Contemporary 2-button paired knob diamond knurl vertical trim

Available Finishes

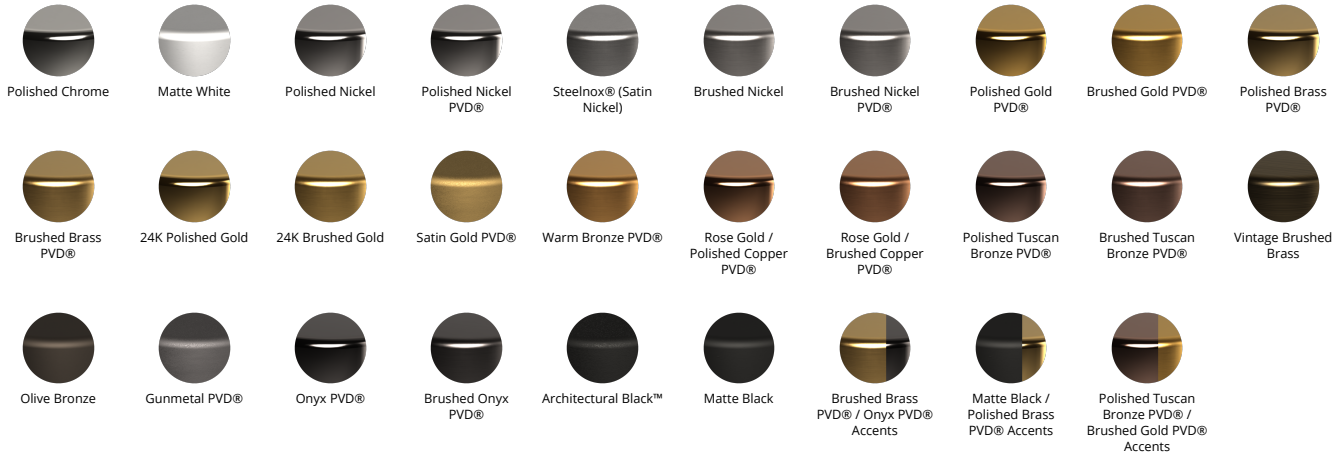
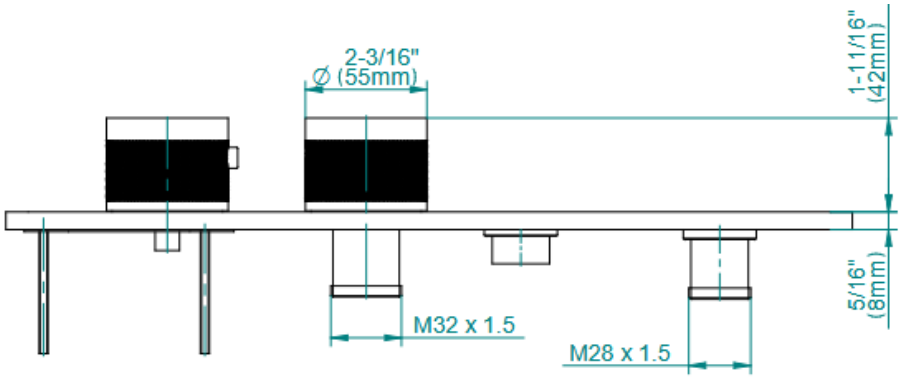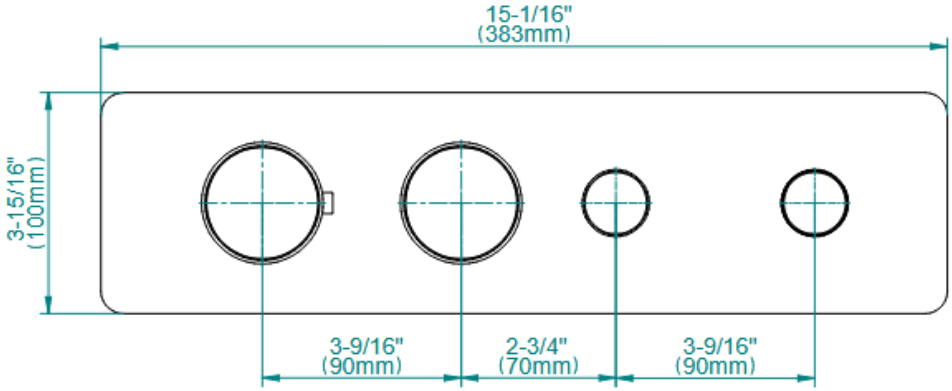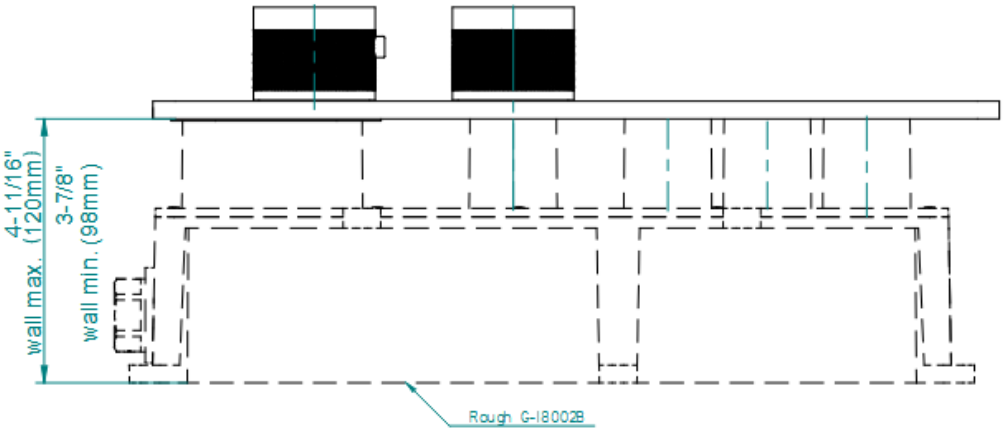
RIVA Collection
G-18022VBD-T
RIVA Contemporary 2-button paired knob diamond knurl vertical trim