RIVA Collection
G-18022VAP-T
RIVA Contemporary 2-button split knob vertical trim

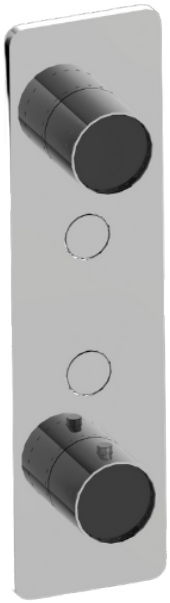

Available Finishes

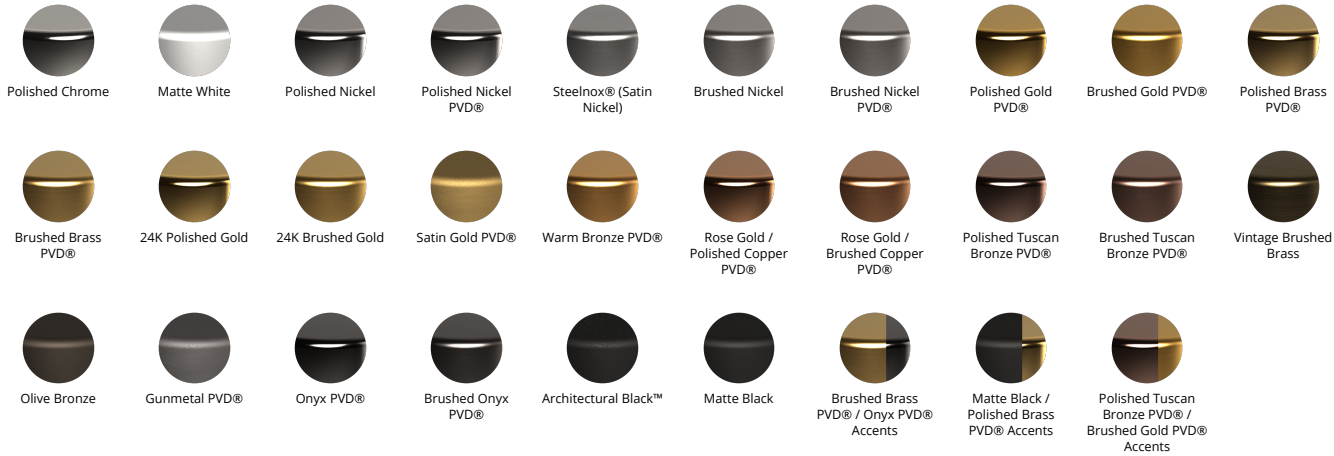
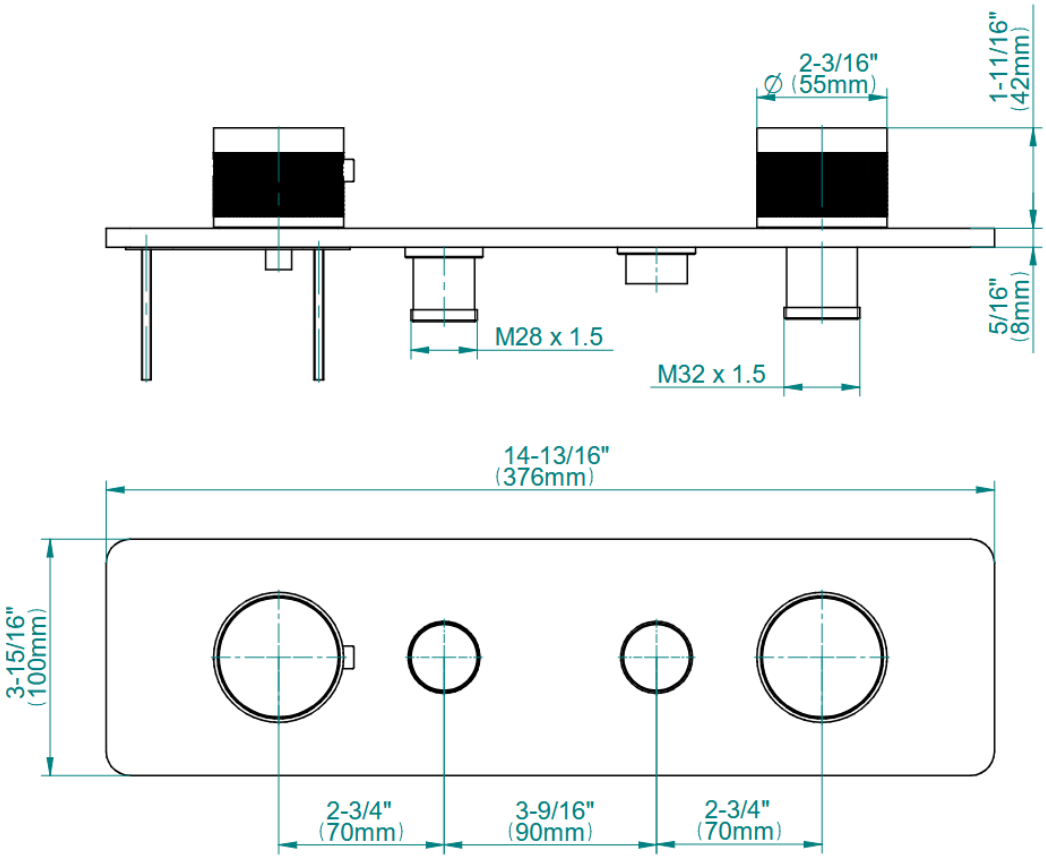
RIVA Collection
G-18022VAP-T
RIVA Contemporary 2-button split knob vertical trim