RIVA Collection
G-18022VAD-T
RIVA Contemporary 2-button split knob diamond knurl vertical trim

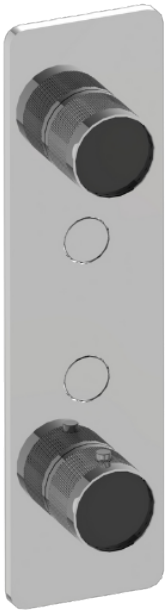

Available Finishes

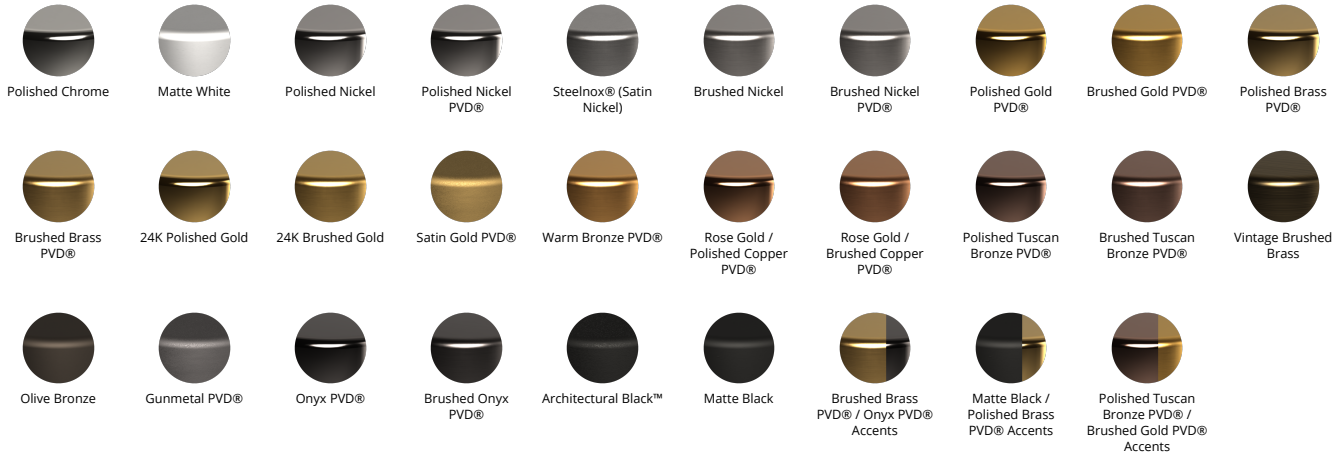
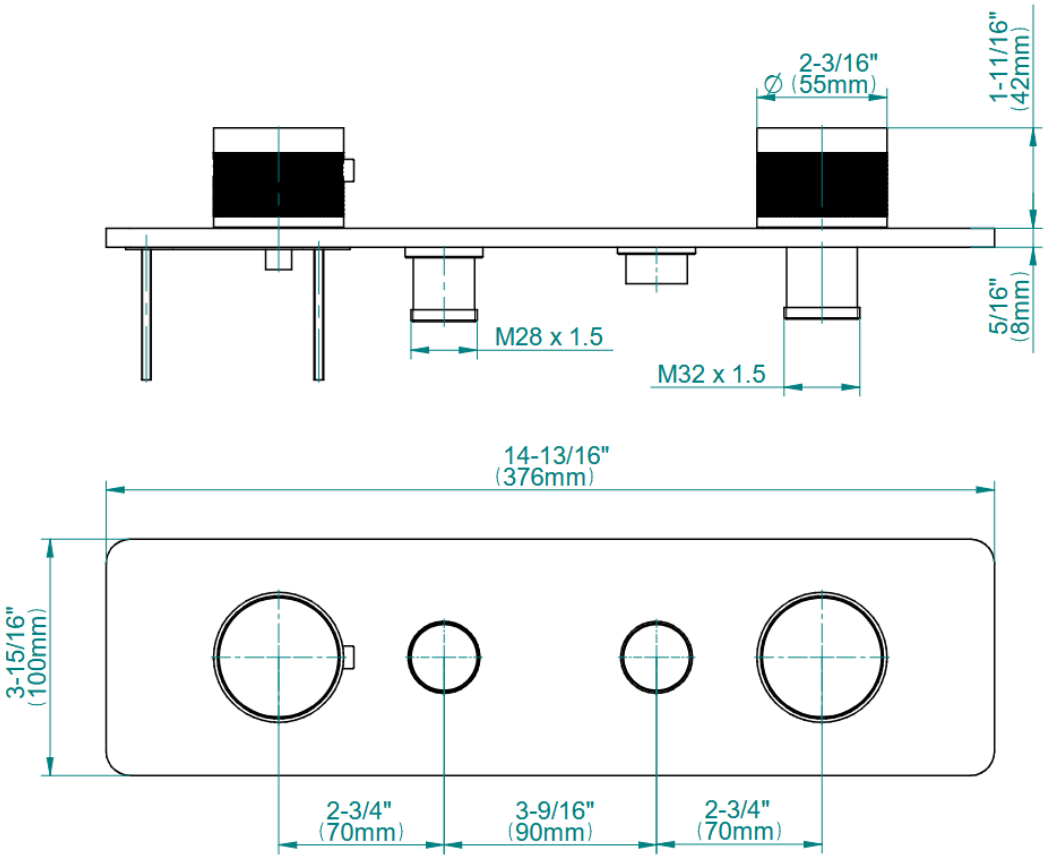
RIVA Collection
G-18022VAD-T
RIVA Contemporary 2-button split knob diamond knurl vertical trim