RIVA Collection
G-18022RDD-T
RIVA Contemporary 2-button diamond knurl round trim

Available Finishes

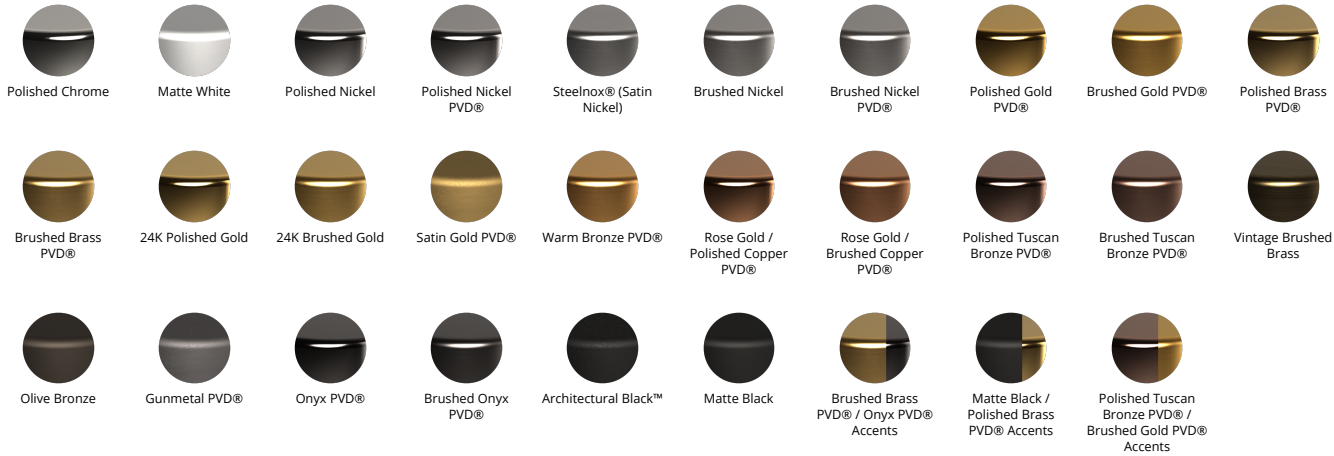
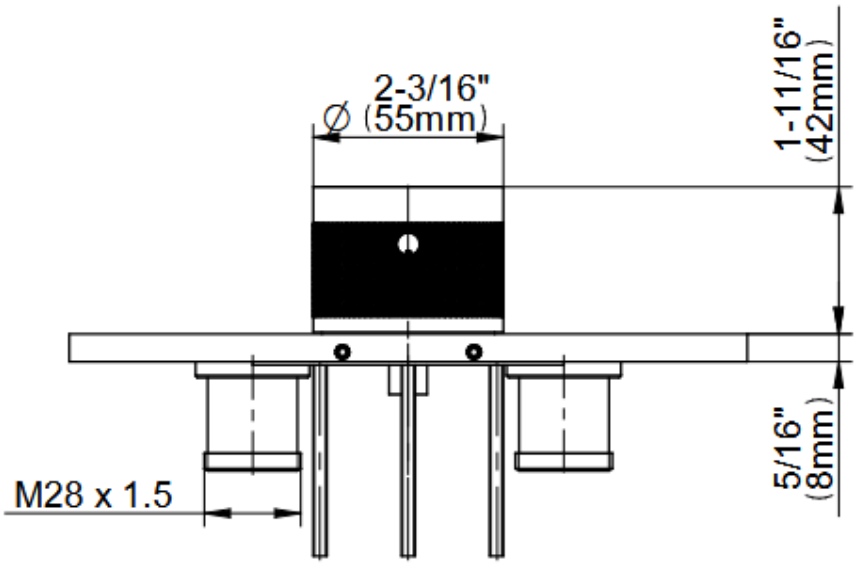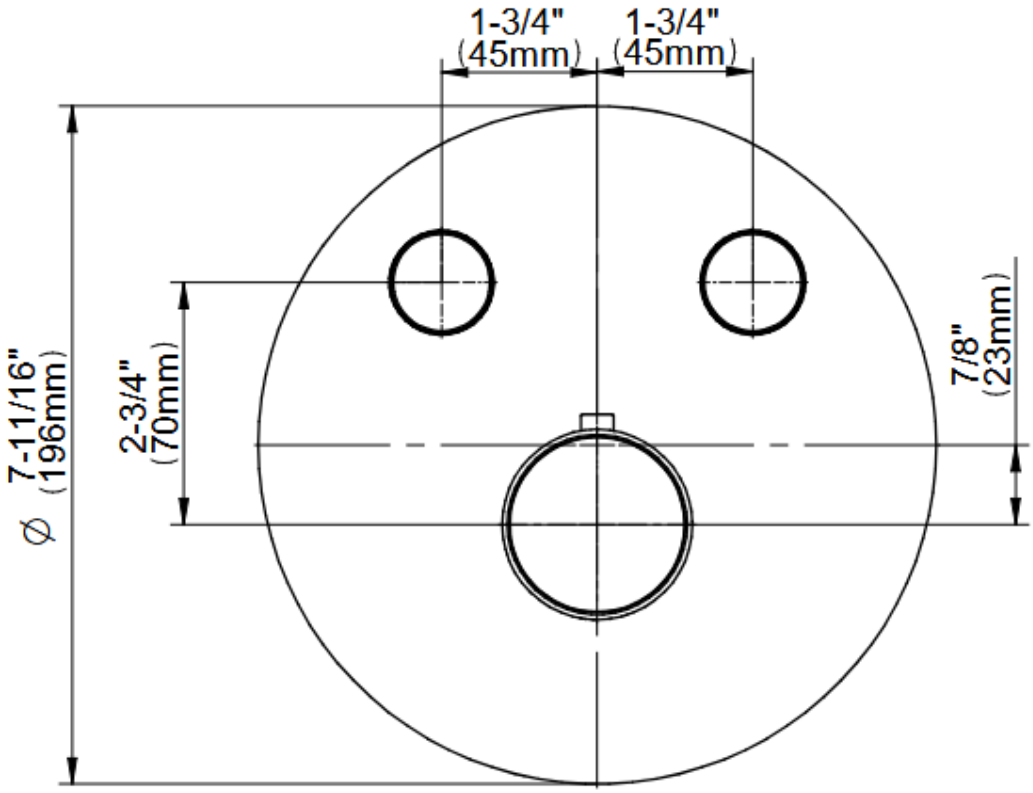
RIVA Collection
G-18022RDD-T
RIVA Contemporary 2-button diamond knurl round trim