RIVA Collection
G-18015VBP-T
RIVA Traditional 5-button paired knob vertical trim

Available Finishes

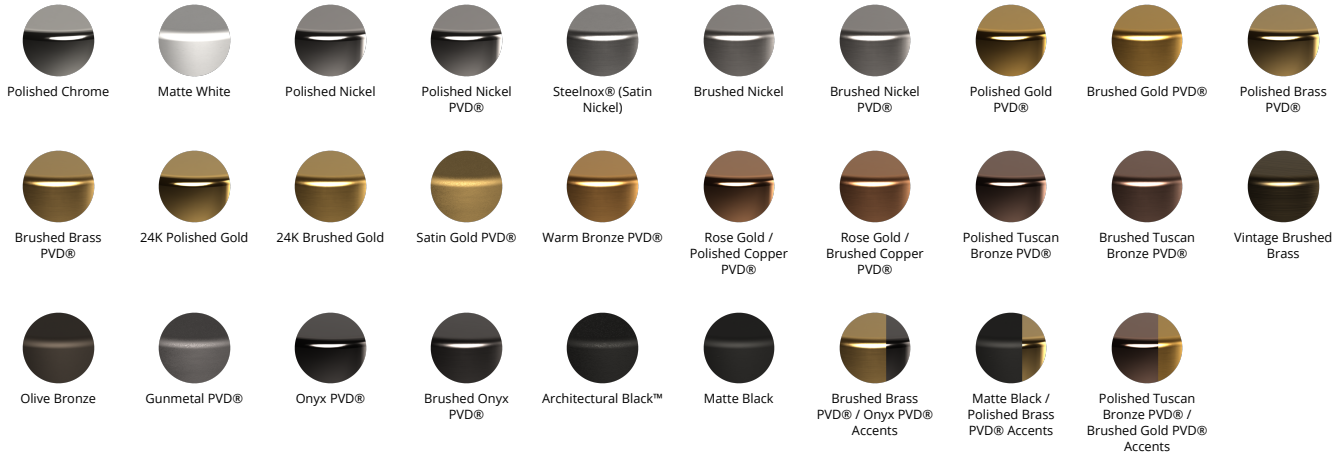
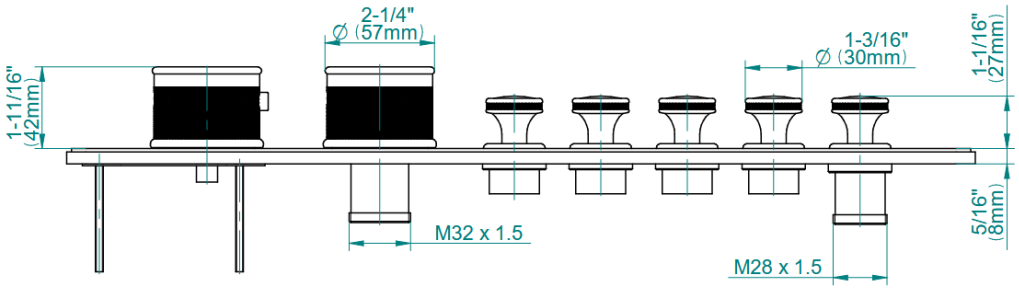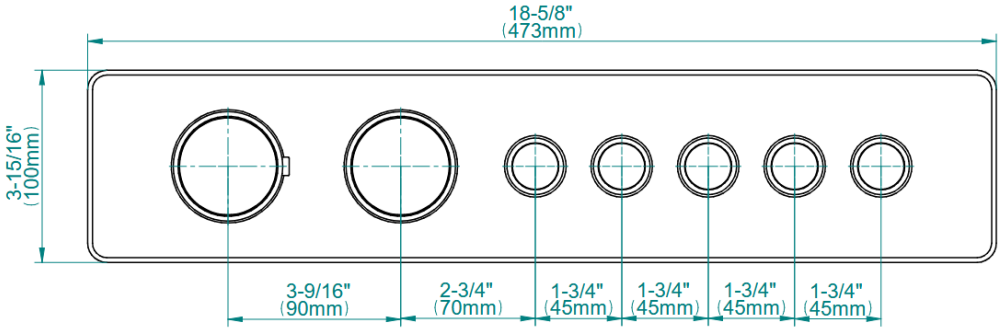
RIVA Collection
G-18015VBP-T
RIVA Traditional 5-button paired knob vertical trim