RIVA Collection
G-18015VBD-T
RIVA Traditional 5-button paired knob diamond knurl vertical trim

Available Finishes

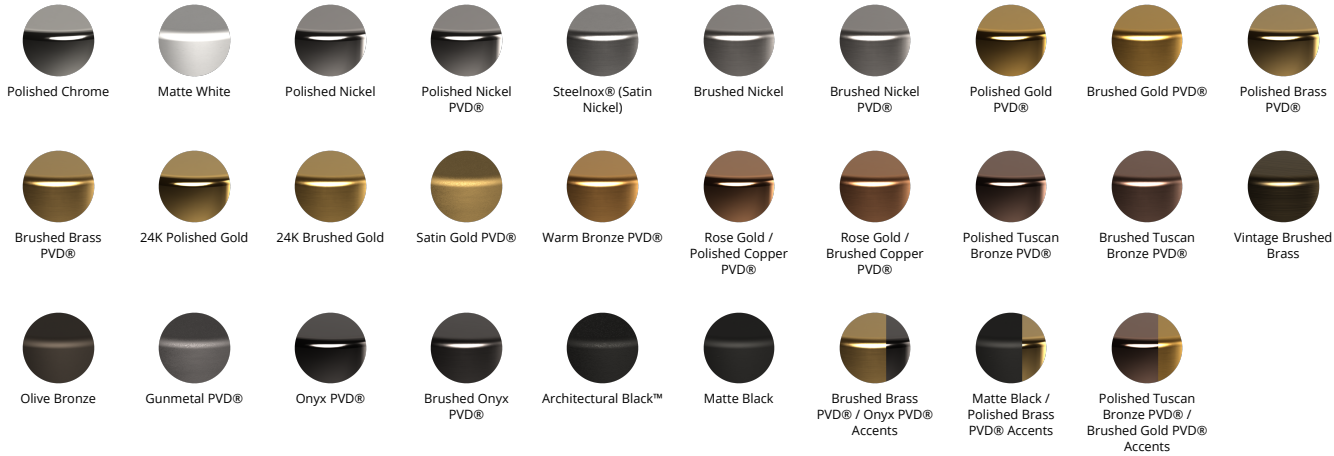
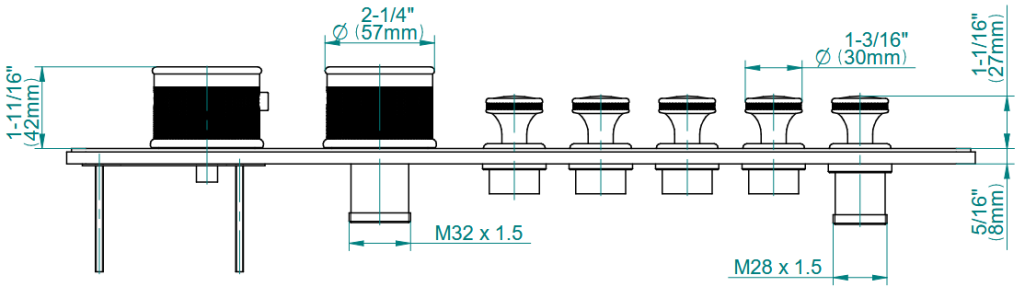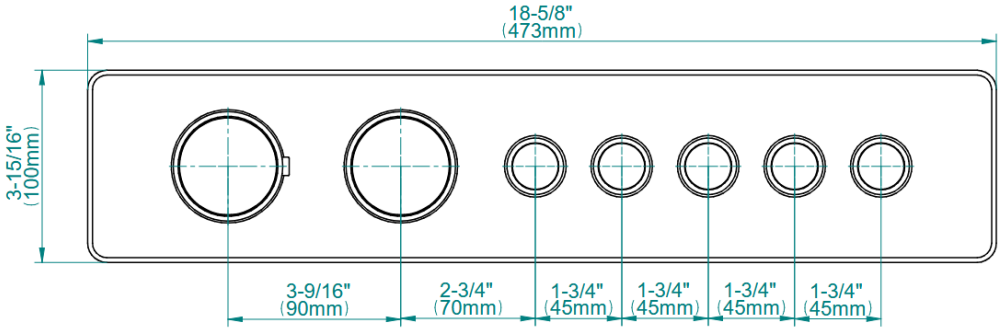
RIVA Collection
G-18015VBD-T
RIVA Traditional 5-button paired knob diamond knurl vertical trim