RIVA Collection
G-18015VAP-T
RIVA Traditional 5-button split knob vertical trim

Available Finishes

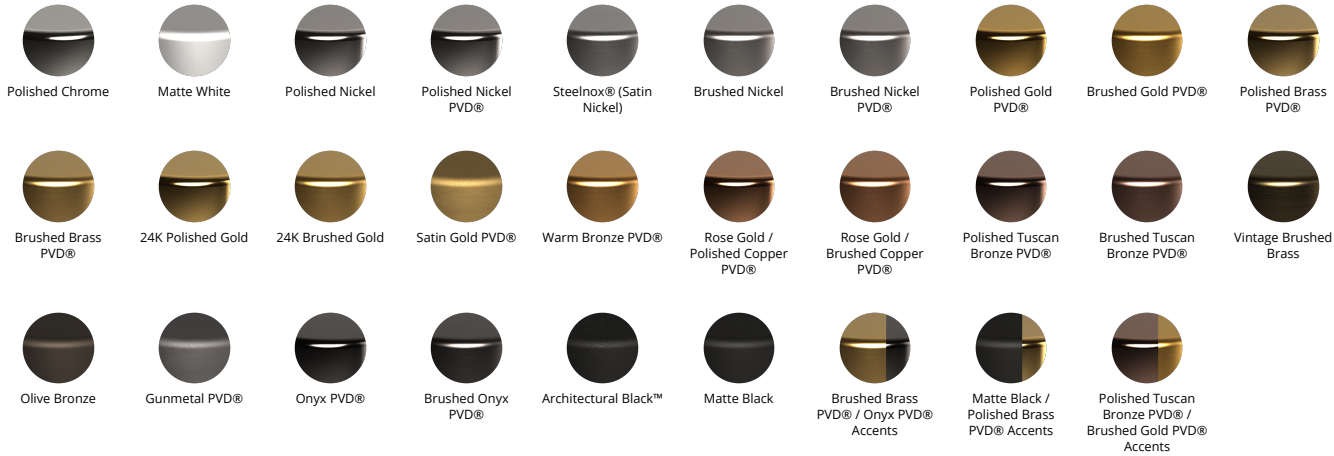
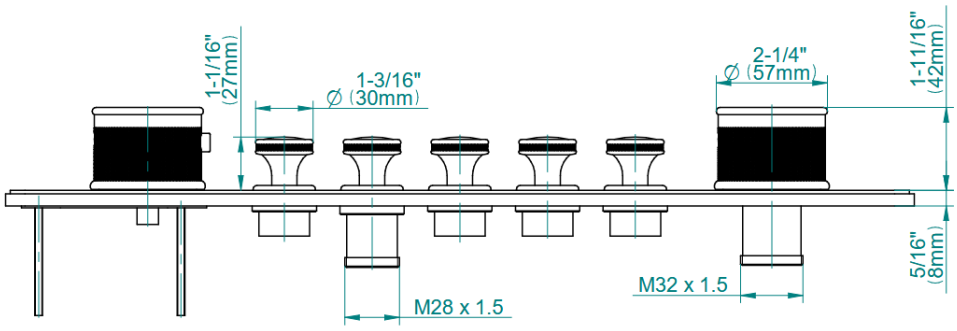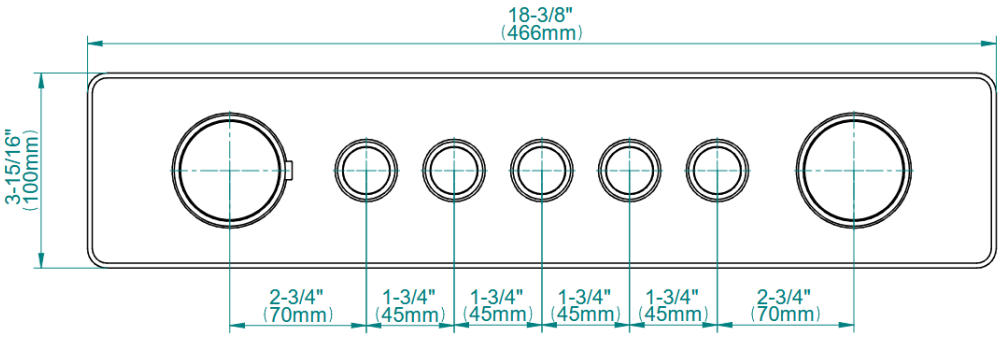
RIVA Collection
G-18015VAP-T
RIVA Traditional 5-button split knob vertical trim