RIVA Collection
G-18015VAD-T
RIVA Traditional 5-button split knob diamond knurl vertical trim

Available Finishes

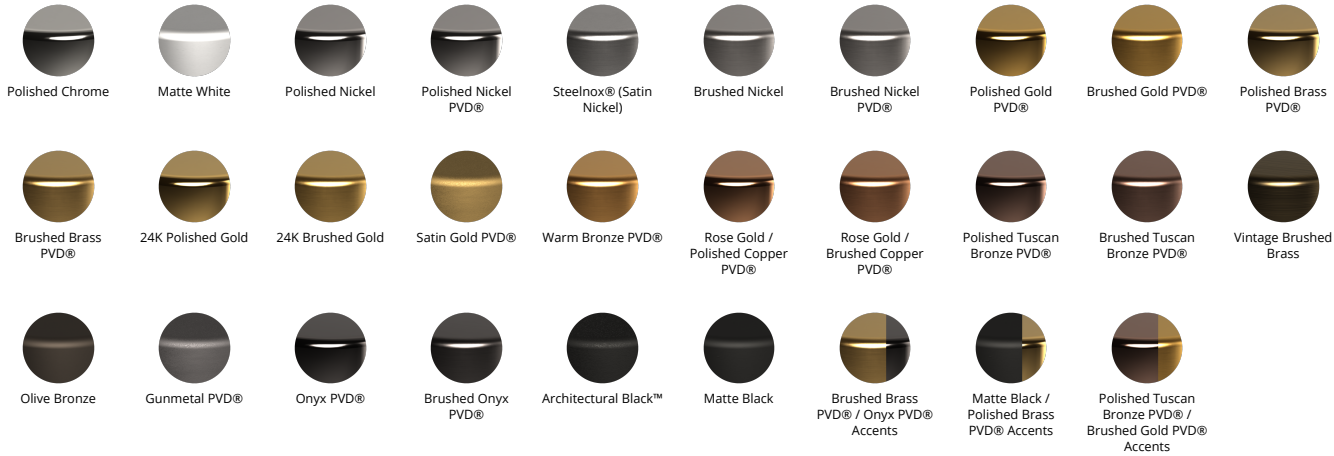
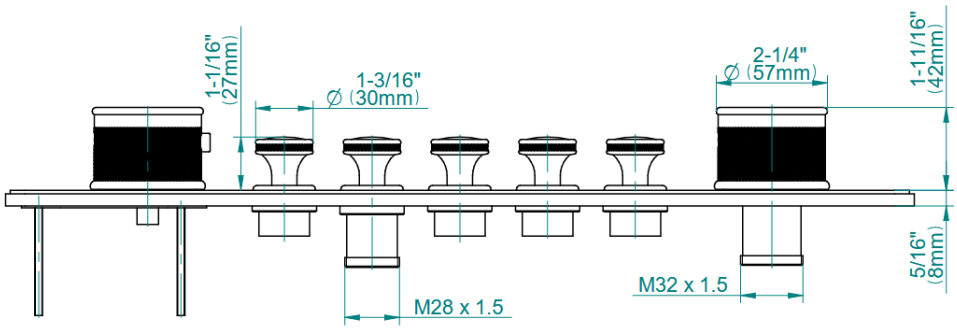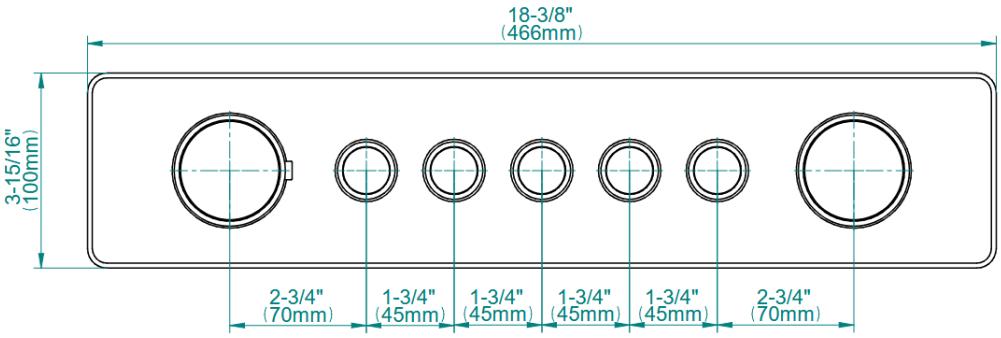
RIVA Collection
G-18015VAD-T
RIVA Traditional 5-button split knob diamond knurl vertical trim