RIVA Collection
G-18015HAP-T
RIVA Traditional 5-button split knob horizontal trim

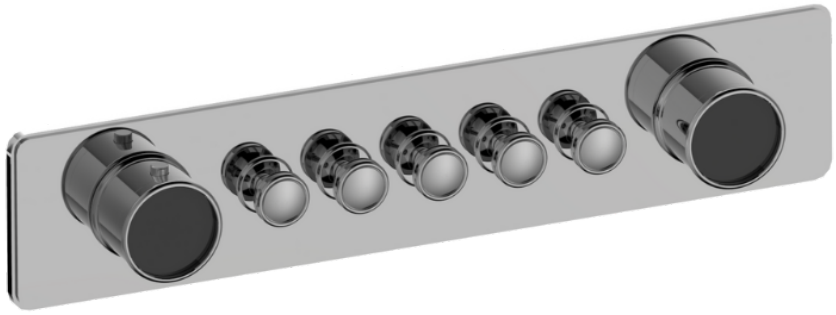

Available Finishes

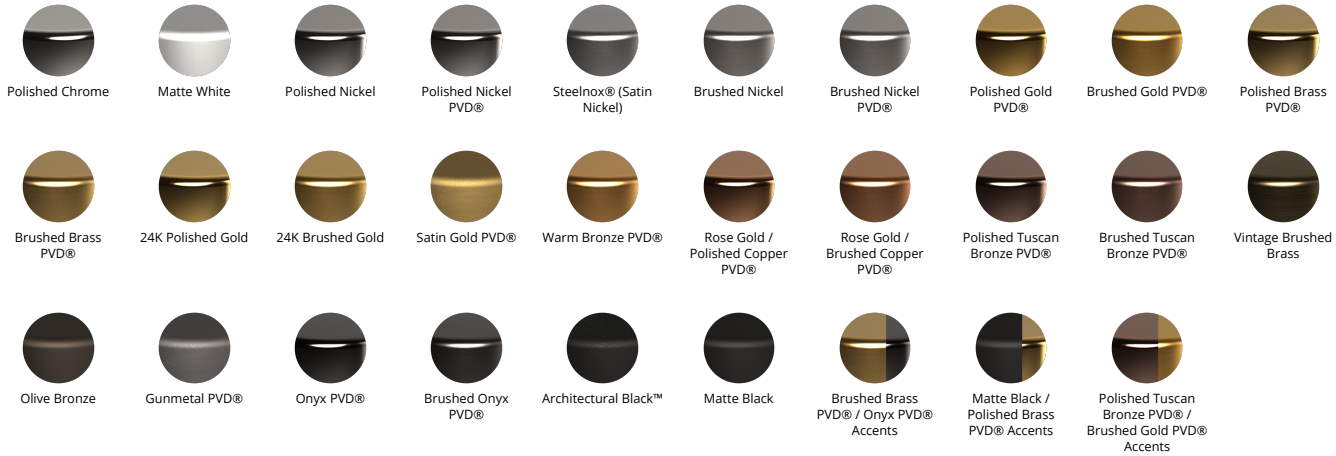
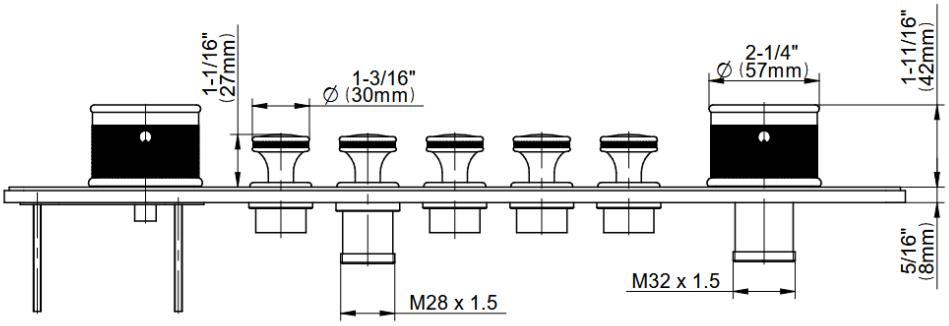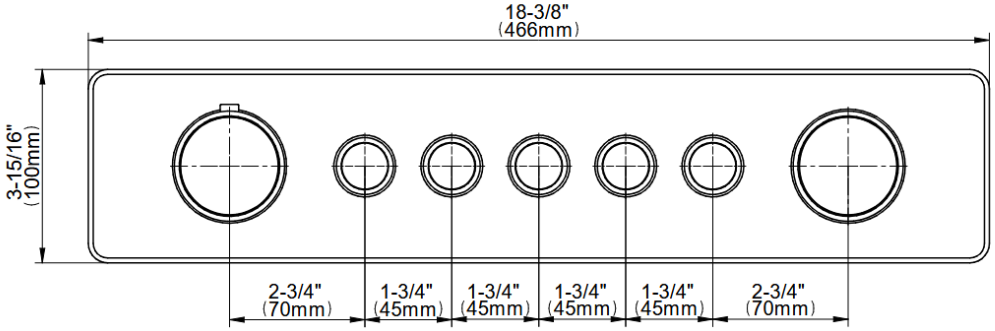
RIVA Collection
G-18015HAP-T
RIVA Traditional 5-button split knob horizontal trim