RIVA Collection
**G-18014VBP-T**
RIVA Traditional 4-button paired knob vertical trim

## Available Finishes

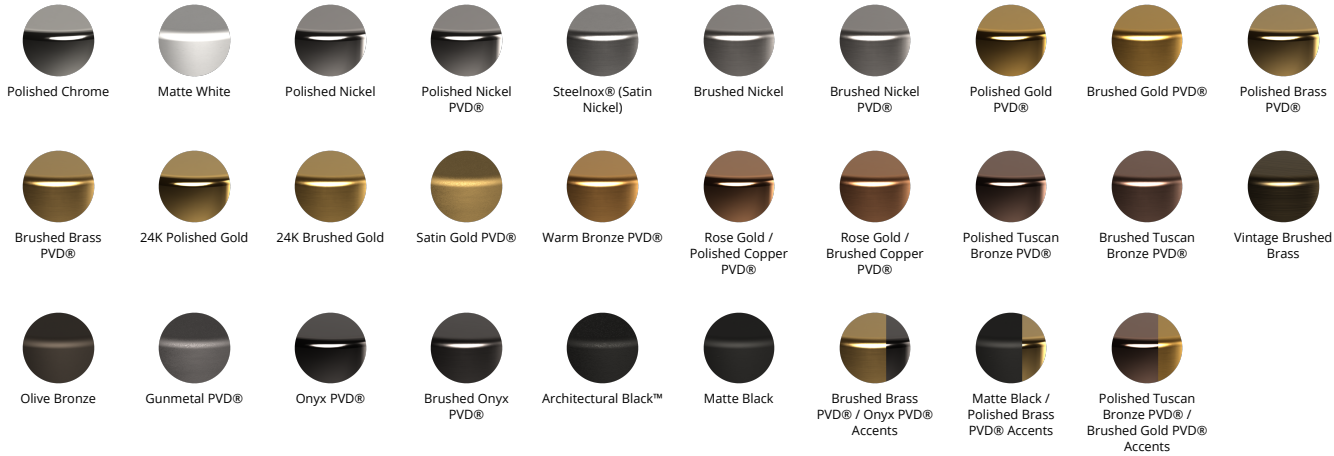
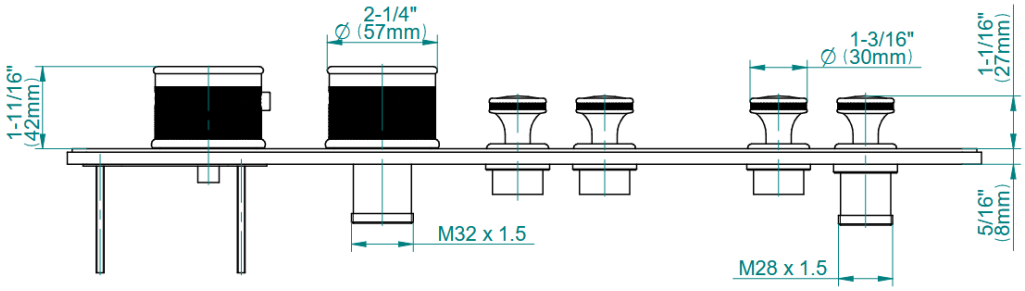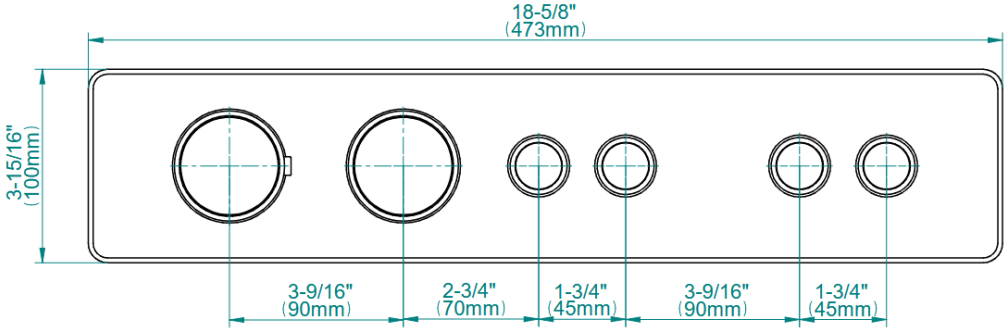
RIVA Collection
**G-18014VBP-T**
RIVA Traditional 4-button paired knob vertical trim