RIVA Collection
G-18014VBD-T
RIVA Traditional 4-button paired knob diamond knurl vertical trim

Available Finishes

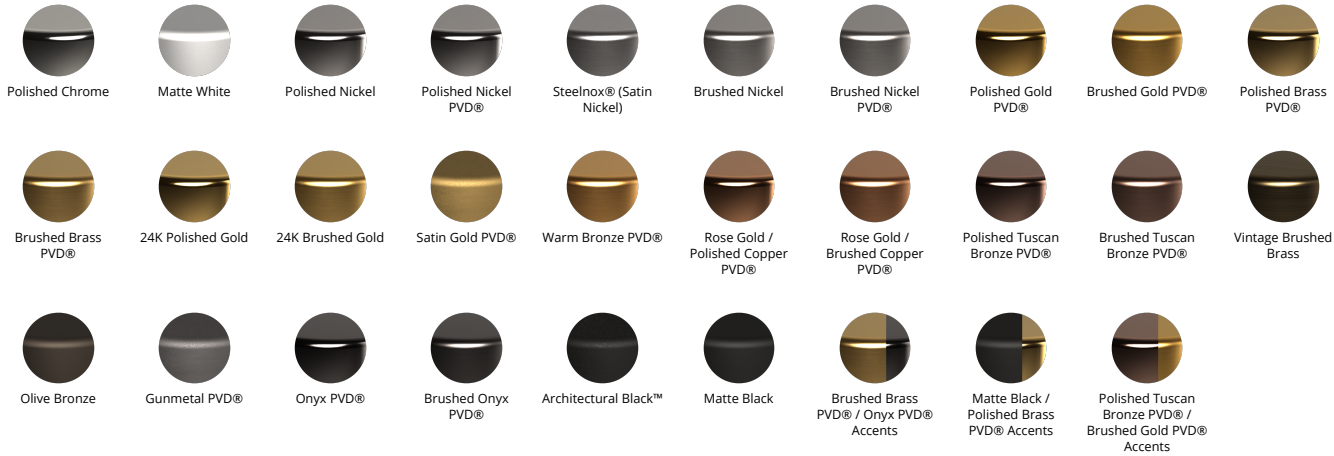
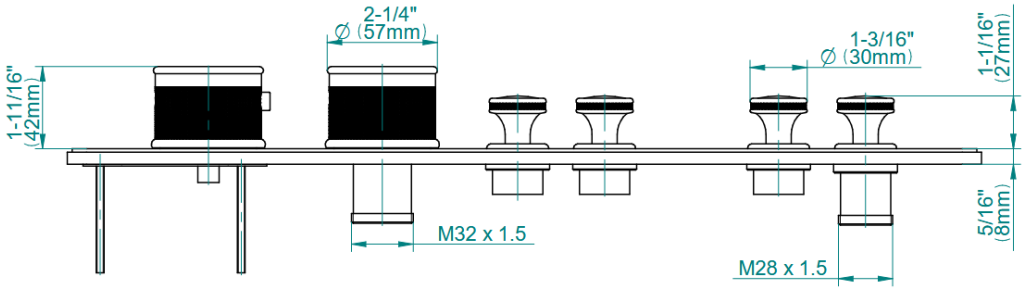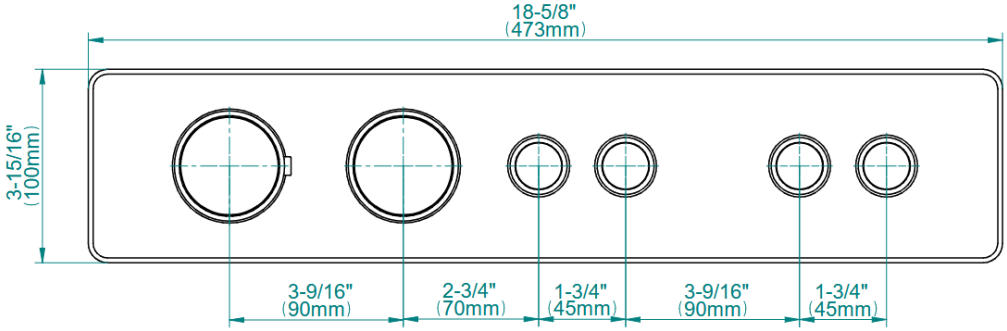
RIVA Collection
G-18014VBD-T
RIVA Traditional 4-button paired knob diamond knurl vertical trim