RIVA Collection
G-18014VAP-T
RIVA Traditional 4-button split knob vertical trim

Available Finishes

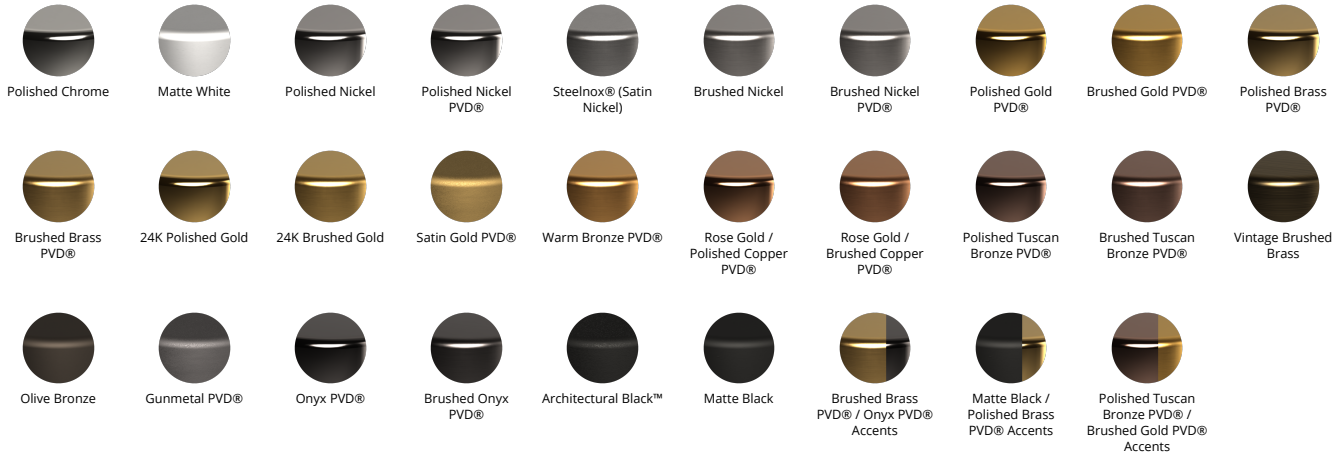
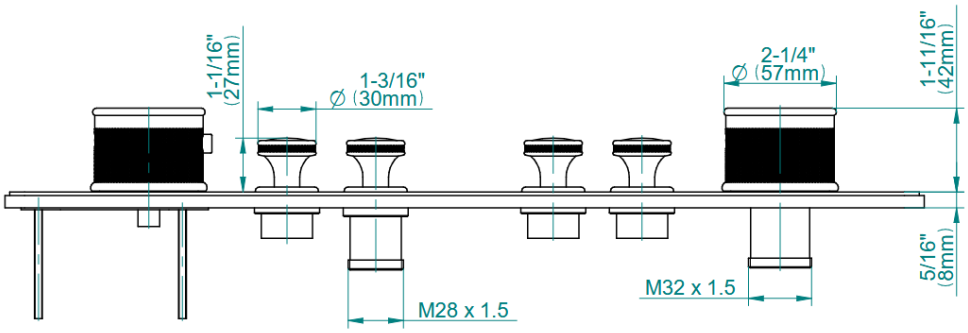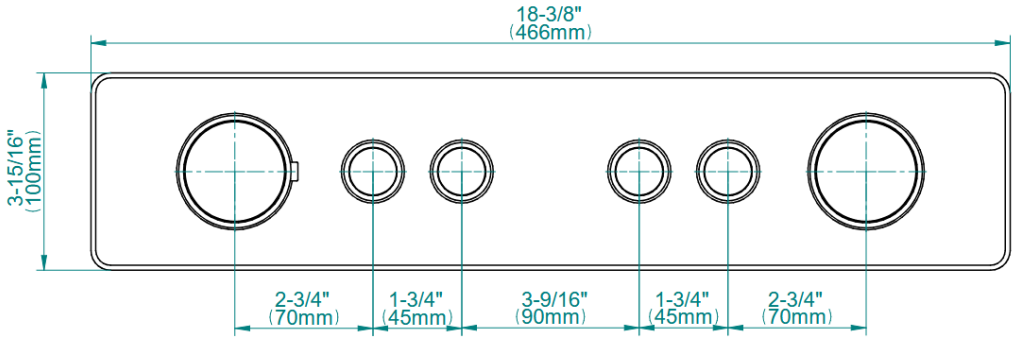
RIVA Collection
G-18014VAP-T
RIVA Traditional 4-button split knob vertical trim