RIVA Collection
G-18014VAD-T
RIVA Traditional 4-button split knob diamond knurl vertical trim

Available Finishes

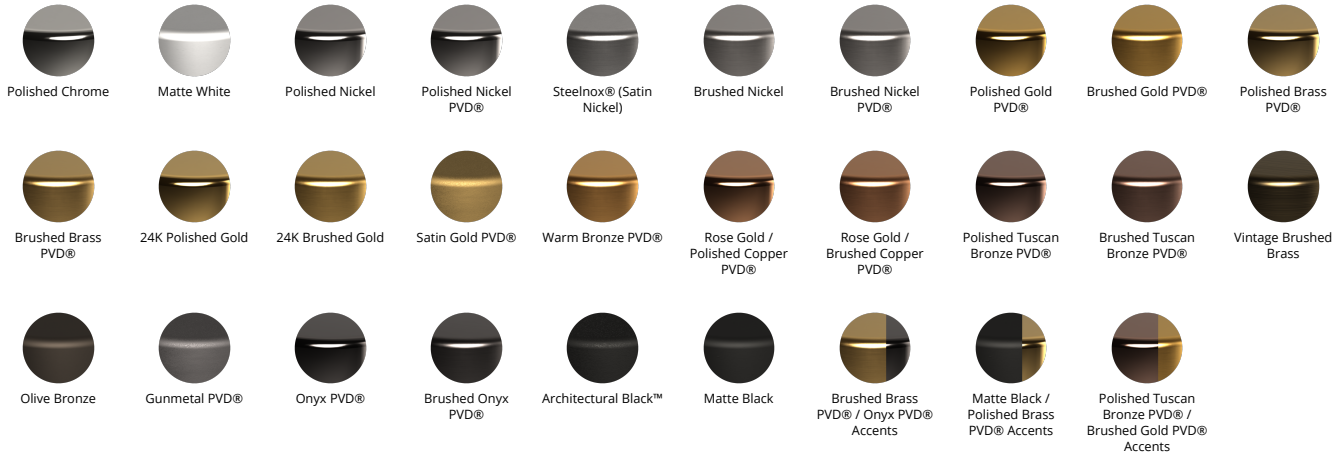
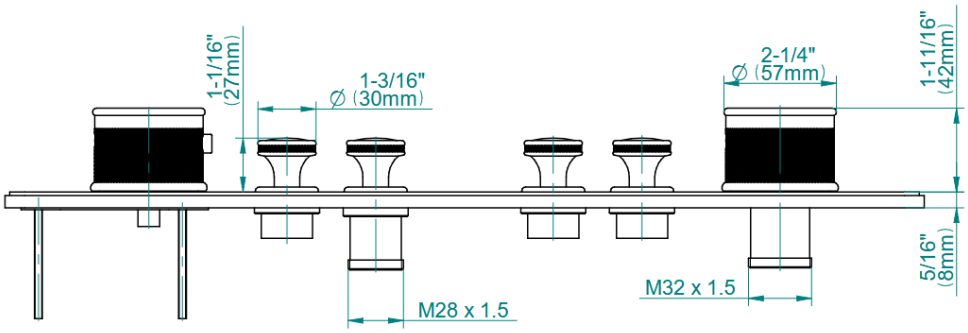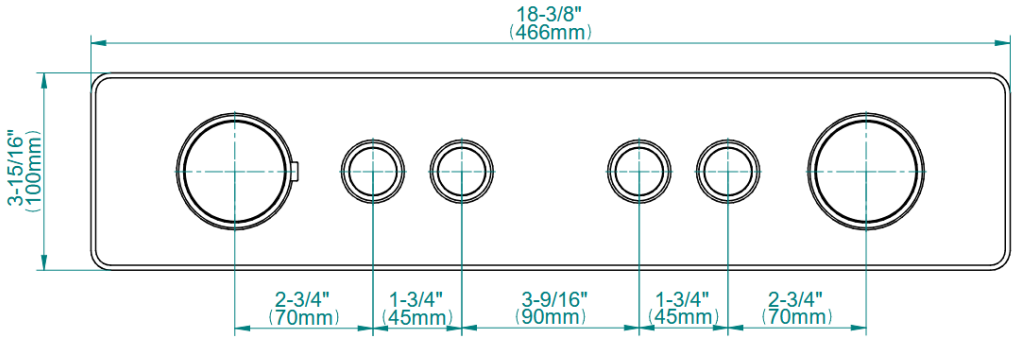
RIVA Collection
G-18014VAD-T
RIVA Traditional 4-button split knob diamond knurl vertical trim