RIVA Collection
G-18014HAP-T
RIVA Traditional 4-button split knob horizontal trim

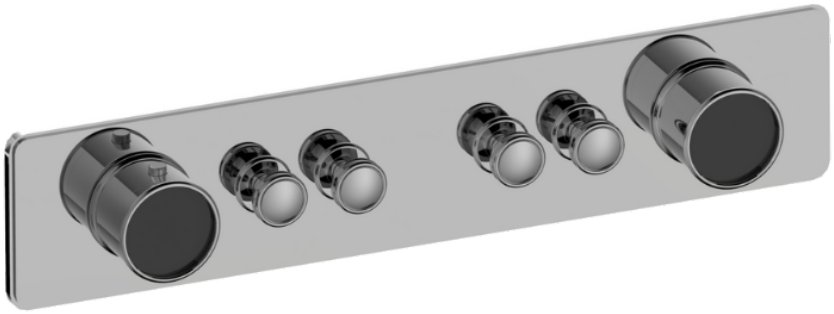

Available Finishes

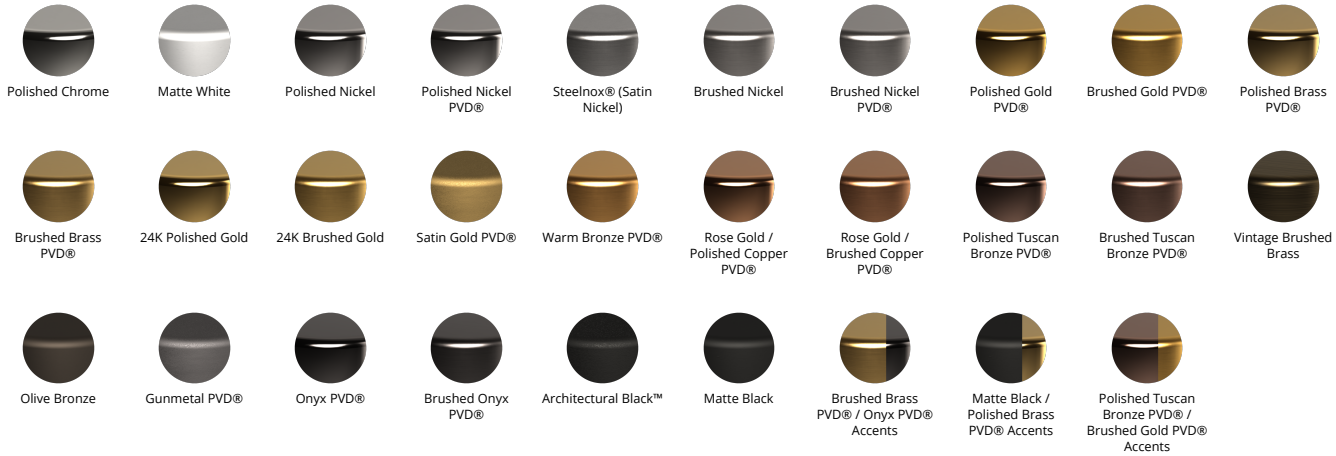
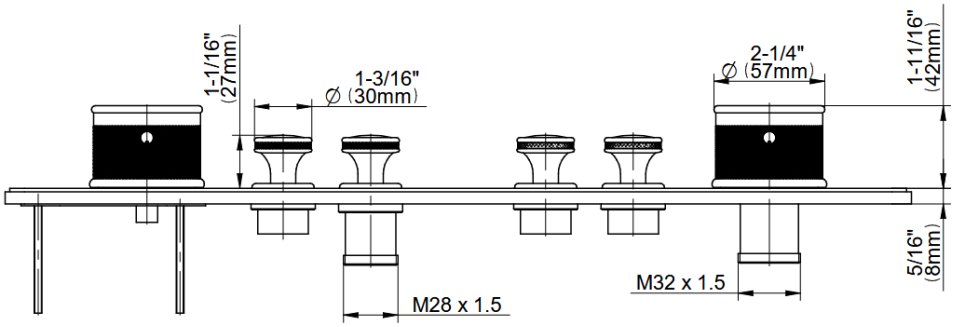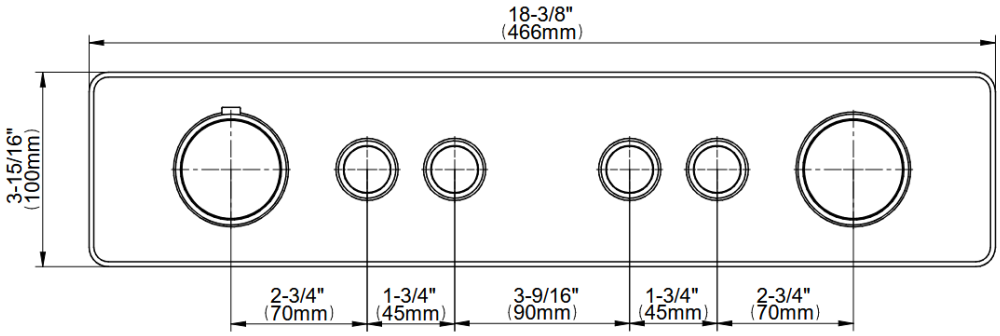
RIVA Collection
G-18014HAP-T
RIVA Traditional 4-button split knob horizontal trim