RIVA Collection
G-18013VBP-T
RIVA Traditional 3-button paired knob vertical trim

Available Finishes

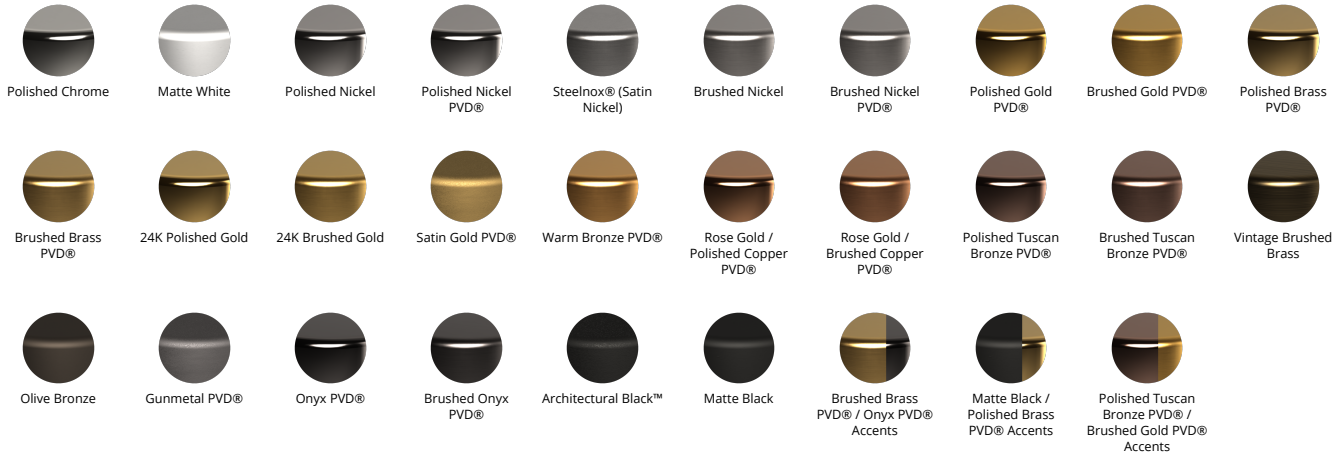
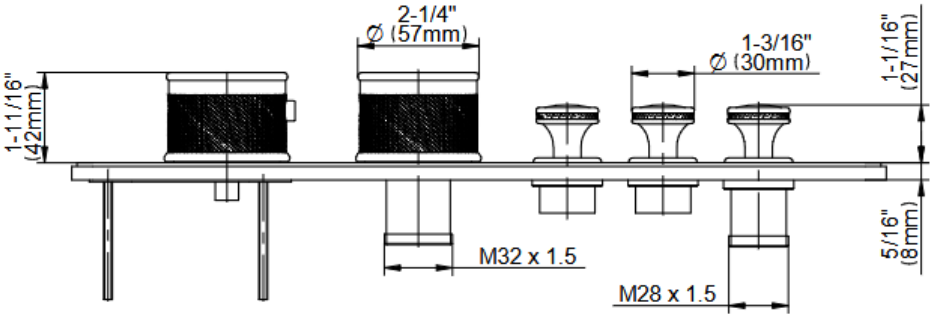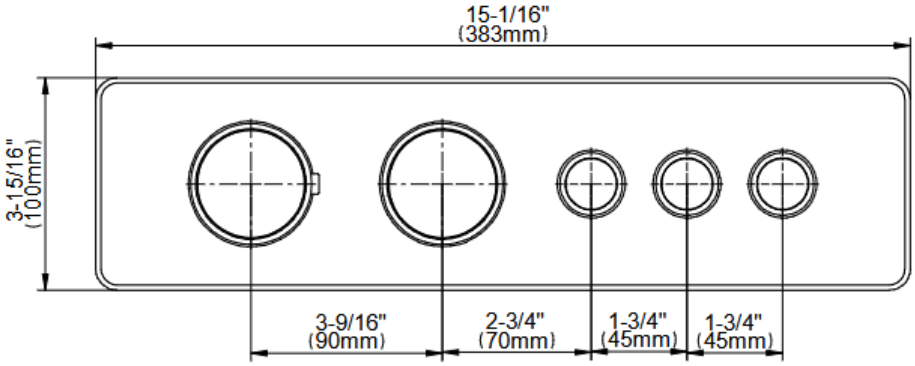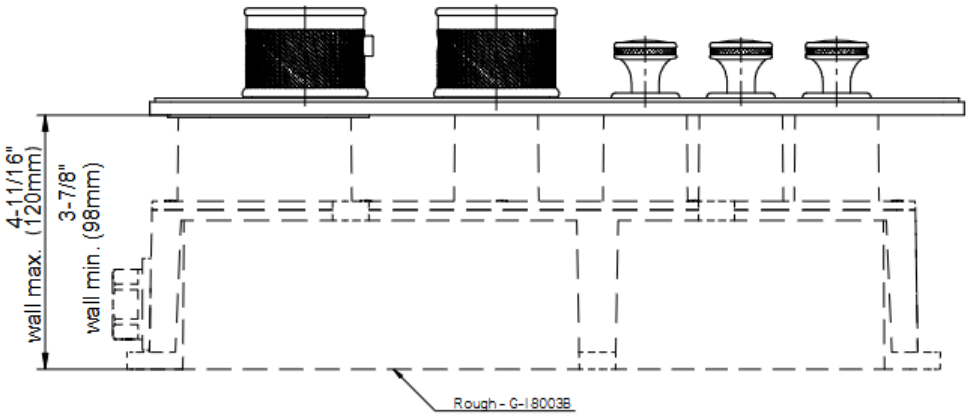
RIVA Collection
G-18013VBP-T
RIVA Traditional 3-button paired knob vertical trim