RIVA Collection
G-18013VBD-T
RIVA Traditional 3-button paired knob diamond knurl vertical trim

Available Finishes

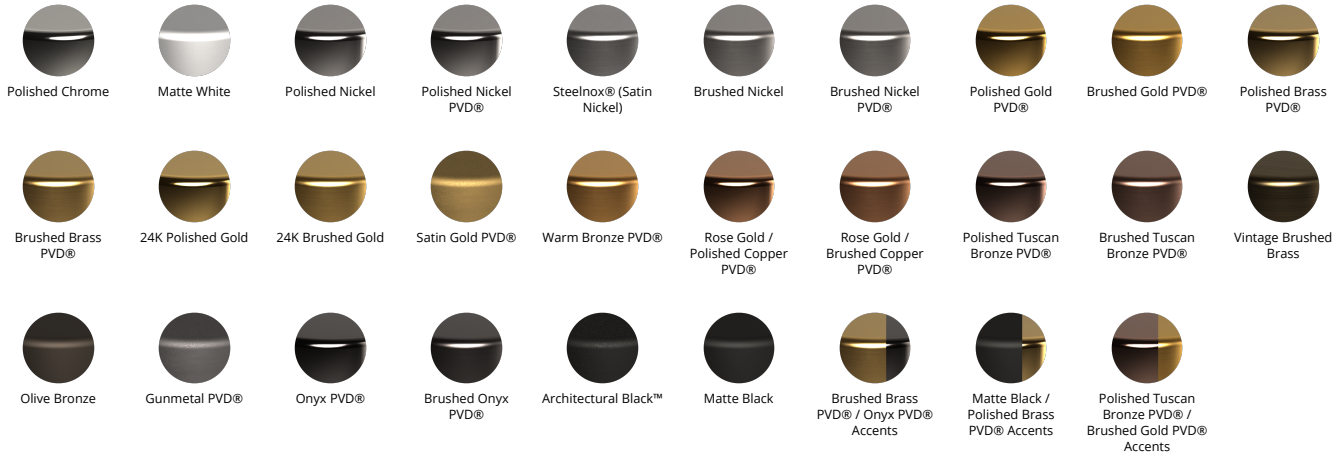
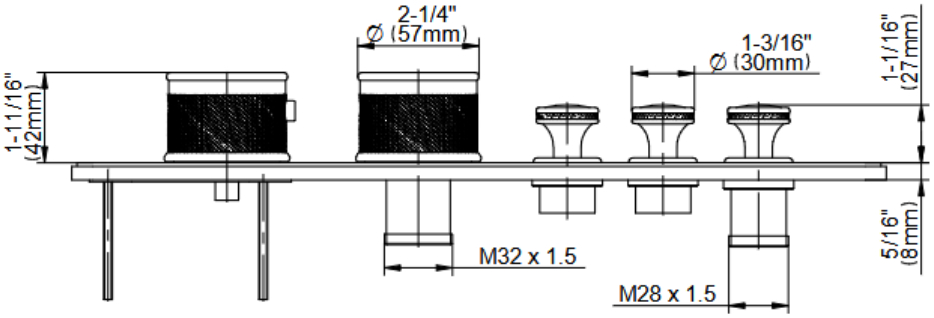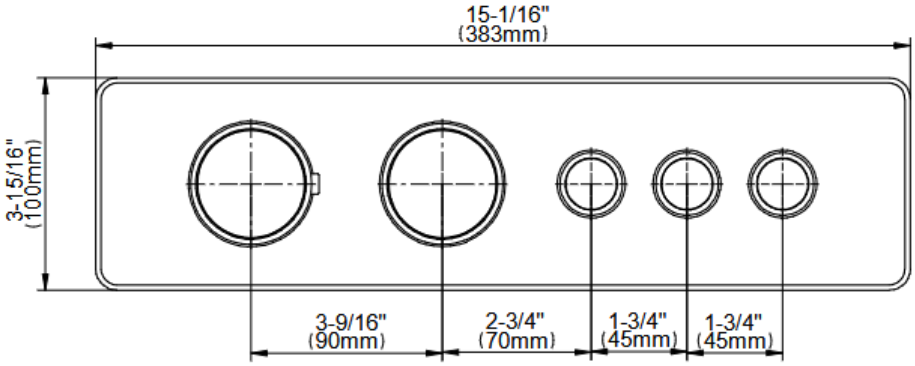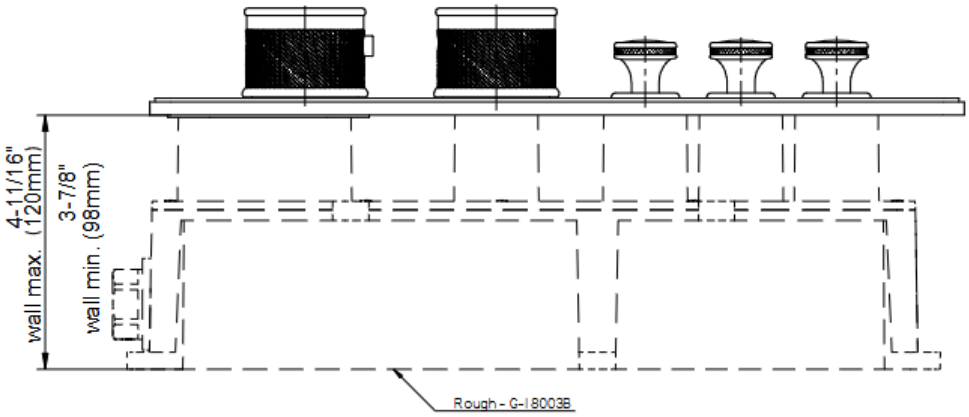
RIVA Collection
G-18013VBD-T
RIVA Traditional 3-button paired knob diamond knurl vertical trim