RIVA Collection
G-18013VAP-T
RIVA Traditional 3-button split knob vertical trim

Available Finishes

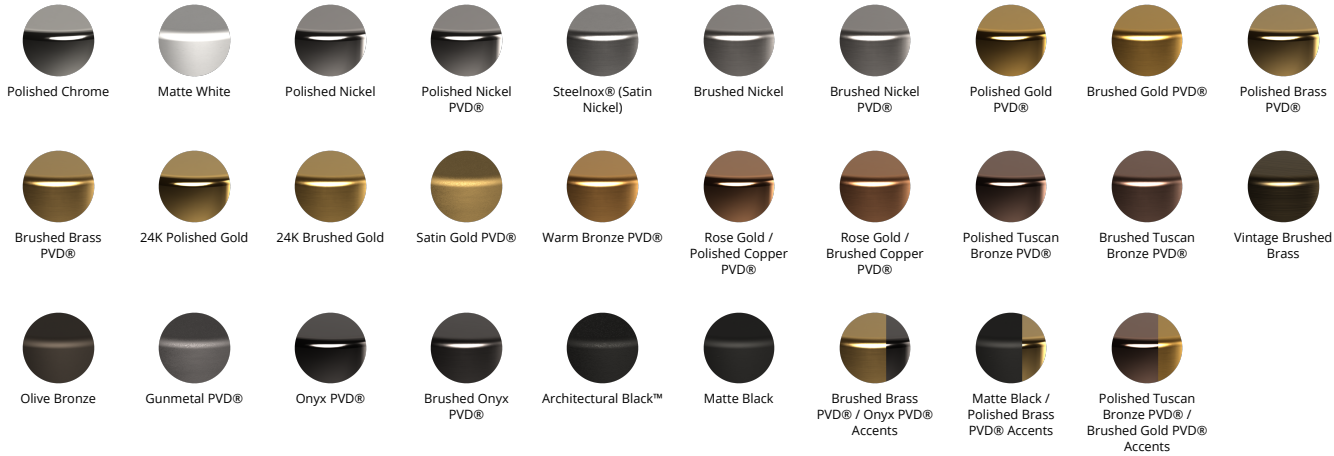
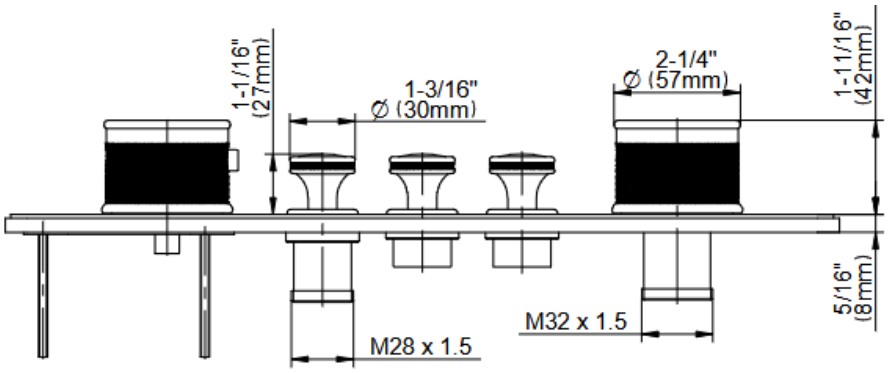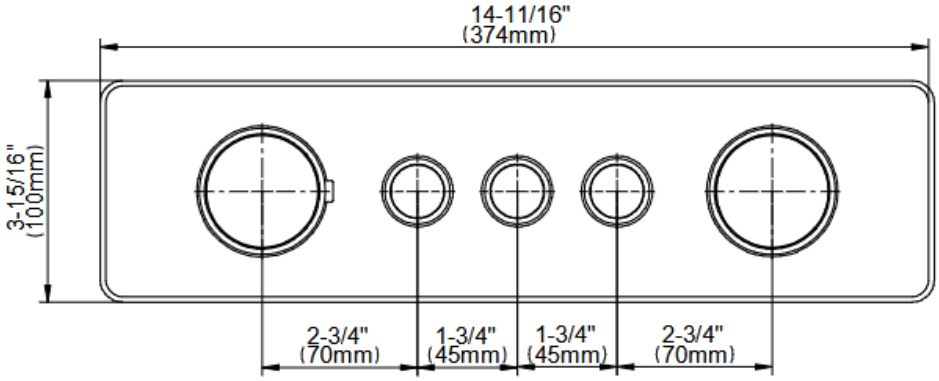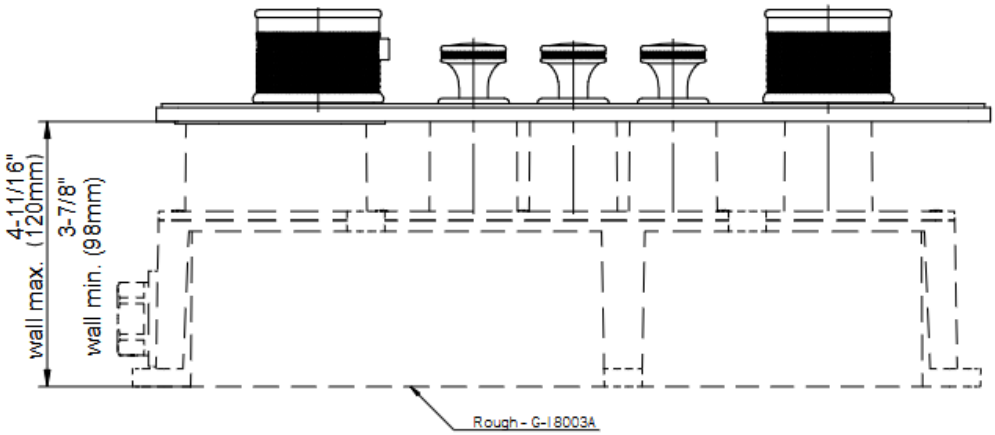
RIVA Collection
G-18013VAP-T
RIVA Traditional 3-button split knob vertical trim